BACKHOE

OPERATION & INSTALLATION MANUAL

Fieldbird Backhoe

Dealer Contact:

Edition 6/2006

TABLE OF CONTENTS

UNDERSTAND SIGNAL WORDS

DANGER: Indicates an imminently hazardous situation which, if not avoided, will result in death or serious injury. This signal word is to be limited to the most extreme situations.

WARNING: Indicates a potentially hazardous situation which, if not avoided, could result in death or serious injury.

CAUTION: Indicates a potentially hazardous situation which, if not avoided, may result in minor or moderate injury. It may also be used to alert against unsafe practices.

IMPORTANT SAFETY PRECAUTIONS

This symbol is used to call attention to safety precautions that should be followed by the operator to avoid accidents. When you see this symbol, carefully read the message that follows and heed its advice. Failure to comply with safety precautions could result in serious bodily injury.

In addition to the design and configuration of equipment, hazard control and accident prevention are dependent upon the awareness, concern, prudence, and proper training of personnel in the operation, transport, maintenance and storage of equipment. Lack of attention to safety can result in accident, personal injury, reduction of efficiency and worst of all-loss of life. Watch for safety hazards and correct deficiencies promptly. Use the following safety precautions as a general guide to safe operations when using this machine. Additional safety precautions are used throughout this manual for specific operating and maintenance procedures. Read this manual and review the safety precautions often until you know the limitations.

AVOID HIGH-PRESSURE FLUID

ESCAPING fluid under pressure can have sufficient force to penetrate the skin and cause serious injury. Be sure to stop engine and relieve all pressure before disconnecting lines. Be sure all connections are tight and that lines, pipes, and hoses are not damaged before applying pressure to the system. Fluid escaping not your hands-to search for suspected leaks. SEE A DOCTOR at once if injured by escaping fluid. Serious infection or gangrene can develop if proper medical treatment is not administered immediately.

SAFETY DECALS

The safety of the operator was a prime consideration in the design of the backhoe. Proper shielding, convenient controls, simple adjustment and other safety features have been built into this implement. The following decals are located on the backhoe. Keep decals clean and replace them immediately if they are missing. Contact your dealer or SEWOONG for replacements.

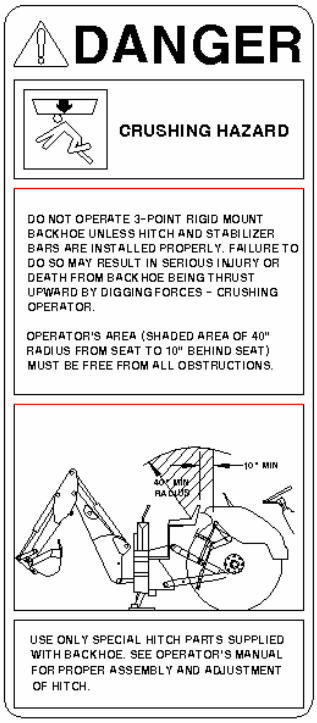

Location: Left Side of Control Tower

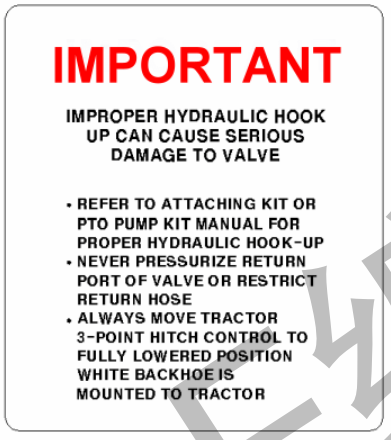

Location: Left Side Toe Shield Area

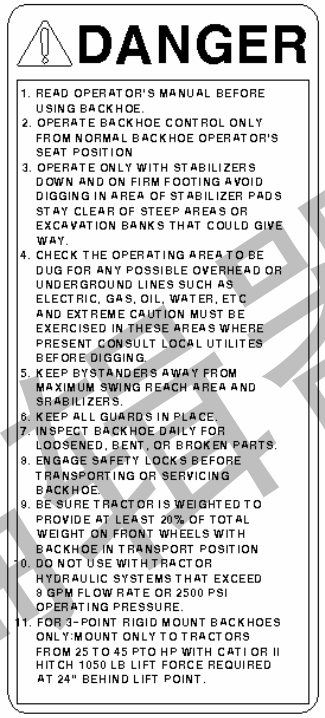

Location: Right Side of Control Tower

Location: Right Side of Control Tower

SAFETY PRECAUTIONS CONTINUED

THE TRACTOR AND/OR LOADER (IF EQUIPPED)

1. Read the tractor and/or loader operator's manual to learn how to operate your tractor and/or loader safely. Failure to do so could result in serious injury or death and equipment damage.

2. It is recommended that tractor be equipped with Rollover Protective System (ROPS) and a seat belt be used for all loader operations
3. Add wheel ballast or front weight for stability.

4. Move wheels to the tractor manufacture's widest recommended settings to increase stability.

5. For better stability, use tractor with wide front axle rather than tricycle front wheels.

6. Move and turn the tractor at low speeds.

7. Stop tractor engine, place transmission in park (or neutral), engage parking break, lower loader arms to ground, cycle all hydraulic controls to relieve pressure, allow machine moving parts to stop, remove ignition key to prevent unauthorized person from starting engine before dismounting tractor or serving, repairing, or making adjustments to the equipment.

8. Wear personal protective equipment (PPE), such as, but not limited to, protection for eyes, ears, lungs, head. hands and feet when operating, servicing, or repairing equipment. Avoid wearing loose clothing or jewelry that may catch and entangle on equipment moving parts.

THE BACKHOE

1. **DO NOT** operate the backhoe unless it is rigidly attached to the tractor.

2. **KNOW** your controls. Read this operator's manual and the manual provided with your tractor. Learn how to stop the tractor, the engine and the backhoe quickly in an emergency.
3. **PROVIDE** adequate front end weight to counter-balance the backhoe at all times. 20% of the total tractor, loader and backhoe weight must be on the tractor front axle. If unsure of weight distribution, at a weight scale. Total vehicle weight, including backhoe and counter weights, must not exceed the ROPS certificate for gross vehicle weight.

4. **BE SURE** the area is clear of overhead or underground utilities or other hazards.

5. **POSITION** a barricade around the work area.

6. **KEEP** all bystanders a safe distance away.

7. **DO NOT** attempt to enter operator's platform backhoe by using the stabilizers as a step.

8. **OPERATE** from the backhoe operator's seat only.

9. **ALLOW** only one person to operate the backhoe at any time.

10. **DISENGAGE** safety locks as shown in Figure 1&3 before attempting to operate the backhoe.

11. **NEVER** dig with the backhoe unless the stabilizers are properly set.

12. **DO NOT** dig under stabilizers or tractor backhoe. Soft ground or sandy soil can cause cave-ins.

13. **KEEP BUCKET** away from the stabilizer area to avoid possible stabilizer damage.

14. **ALWAYS** swing bucket uphill to dump when on a hillside and keep loaded bucket low.

15. **SET BRAKES** and block wheels when operating on hills and banks to avoid dangerous runaway.

16. **WATCH** for overhead wires. DO NOT touch wires with any part of the backhoe.

17. **NEVER** allow a person to work under a raised bucket.

18. **NEVER** lift a person with the backhoe.

19. **DO NOT** use the backhoe as a battering ram. Use the backhoe only for digging.

20. **ALWAYS** lower the backhoe bucket and stabilizers to the ground, shut off engine, and apply the parking break before getting off unit, or when not digging.

21. **NEVER** leave the tractor unattended with the engine running.

22. **DO NOT** attempt to raise the tractor off the ground or move the tractor forward or backward using the backhoe Dipper stick or bucket.

TRANSPORTATION

1. **ALWAYS** engage safety locks before transporting backhoe. See Figure 1 & 3.

2. **DO NOT** drive the tractor near the edge of a ditch or excavation.

3. **ALWAYS** use accessory lights and devices when transporting on a road or highway to warn operators of other vehicles. Check your local government regulations.

4. **BE SURE** the SMV emblem is visible to the rear.

ADJUSTMENTS AND INSPECTION

1. **CHECK** pins that attach backhoe to tractor and all pivot pins for tightness several times daily. Replace any parts that are bent, broken or missing.
2. **ALWAYS** engage safety locks before servicing backhoe. See Figures 1 & 3.
3. **DO NOT** oil, grease, or adjust the backhoe while it is in motion. For greasing, see Service section for details.

4. **DO NO**T change any backhoe relief valve settings. They are factory set for best backhoe performance and safety.

5. **PROTECT YOUR EYES** - WEAR SAFETY GLASSES.

6. **GUARD AGAINST INJURY** when driving connecting pins or performing any repair in which particles can chip from work piece or striking tool.

7. **DO NOT** remove any guards on backhoe or tractor.

IMPORTANT FEDERAL LAWS AND REGULATIONS *
CONCERNING EMPLOYERS, EMPLOYEES AND OPERATIONS.

* (This section is intended to explain in board terms the concept and effect of the following federal laws and regulations. It is not intended as a legal interpretation of the laws and should not be considered as such).

U.S. Public Laws 91-596 (The Williams - Steiger Occupational and Health Act of 1970) OSHA

This Act Seeks.
"...to assure so far as possible every working man and woman in the nation safe and healthful working conditions and to preserve our human resources..."

DUTIES

Sec. 5 (a) Each employer -
(1) Shall furnish to each of his employees employment and place of employment which are free from recognized hazard that are causing or are likely to cause death or serious physical harm to his employees ;
(2) Shall comply with occupational safety and health standard promulgated under this Act.
(b) Each employee shall comply with occupational safety and health standards and all rules, regulations and orders issued pursuant to this Act which are applicable to his own actions and conduct.

OSHA Regulations

Current OSHA regulations state in part: "At the time of initial assignment and at least annually thereafter, the employer shall instruct every employee in the safe operation and servicing of all equipment with which the employee is, or will
be involved." These will include (but are not limited to) instructions to: Keep all guards in place when the machine is in operation ; Permit no riders on equipment ;

Stop engine, disconnect the power source, and wait for all machine movement to stop before servicing, adjusting, cleaning or unclogging the equipment, except where the machine must be running to be properly serviced or maintained, in which case the employer shall instruct employees as to all steps and procedures which are necessary to safely service or maintain the equipment.

Make sure everyone is clear of machinery before starting the engine, engaging power, or operating the machine.

EMPLOYEE TRACTOR OPERATING INSTRUCTIONS:

1. Securely fasten your seat belt if the tractor has ROPS.
2. Where possible, avoid operating the tractor near ditch, embankments, and holes.
3. Reduce speed when turning, crossing slopes, and on rough, slick, or muddy surfaces.
4. Stay off slopes too steep for safe operation.
5. Watch where you are going, especially at row ends, on roads, and around trees.
6. Do not permit others to ride.
7. Operate the tractor smoothly - no jerky turns, starts, or stops.
8. Hitch only to the drawbar and hitch points recommended by tractor manufactures.
9. When the tractor is stopped, set brakes securely and use park lock if available.

Child Labor Under 16 Years Old

Some regulations specify that no one under the age of 16 may operate power machinery. It is your responsibility to know what these regulations are in your own area or situation. (Refer to U.S. Dept. of Labor, Employment Standard Administration, Wage & Home Division, Child Labor Bulletin #102.)

GENERAL OPERATION

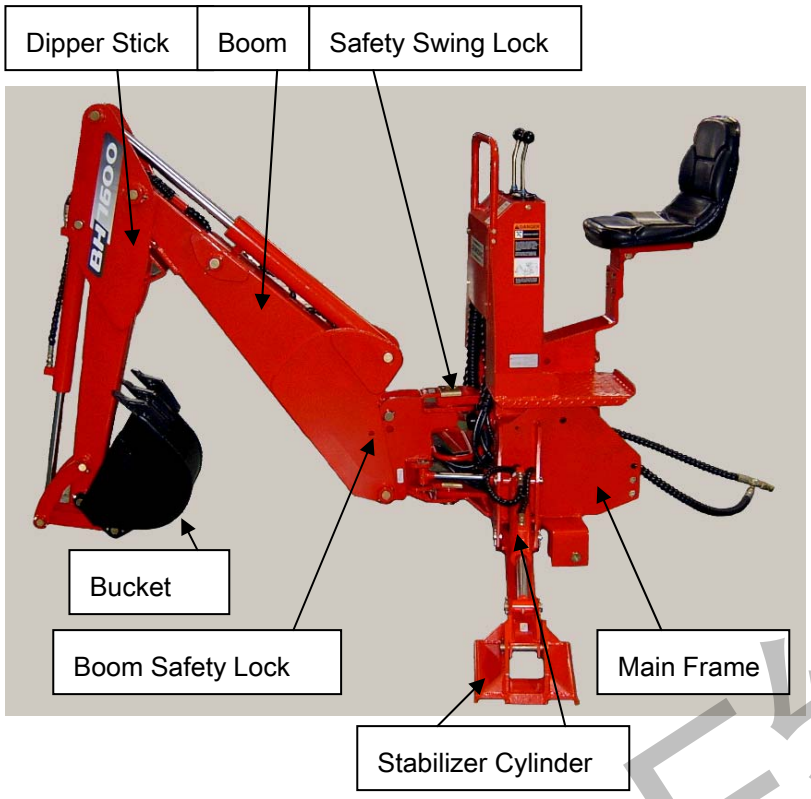

CAUTION

To avoid possible injury, observe the following safety rules BEFORE OPERATING the backhoe:

1. BE SURE the area is clear of underground utilities or other hazards
2. POSITION a barricade around the work area.
3. PROVIDE adequate front end weight to counter-balance the tractor at all times. 20% of the total tractor.

DIRECTIONS: The terms right, left, front and back shall be determined from the position of the operator when seated in the operating position on the backhoe.

ENGINE SPEED

The speed at which the backhoe operates is partially dependent on engine RPM. Use a moderate engine speed to start and increase it as your experience permits. Refer to "DIMENSIONS AND SPECIFICATONS" on Page 42 for hydraulic flow volume requirement. When powering from tractor systems with higher output, reduce engine RPM to obtain acceptable backhoe operating speed.

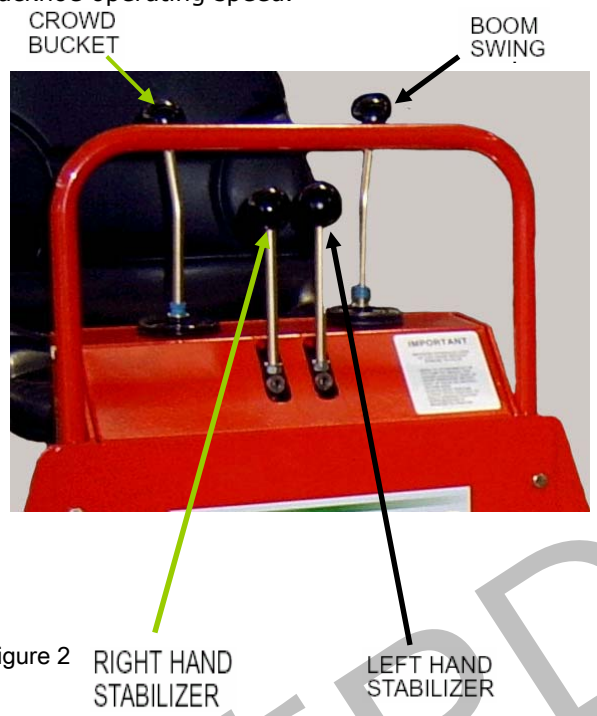

Figure 2

CONTROLS

The backhoe has two major control levers plus the stabilizer control levers. These controls are located on the control panel directly ahead of the operator. See Figure2. The following is a list of the controls, with the function of each, reading from left to right.

1. Boom/Swing: Push lever forward, the boom moves down, away from the operator. Pull lever back, the boom moves up, toward the operator.

The Boom/Swing Control lever has an added "float" function. A detent or stop should be felt when the lever is pushed forward to move the boom down. Pushing the lever forward more will overcome the detent and cause the boom to float, or move down or up freely, depending on the forces acting on it. when the lever is released it should return to the center, neutral position.

Move lever to the left, the backhoe swings to the left. Move lever to the right, the backhoe swings to the right. By moving the lever to one of the intermediate positions, the boom can be swung left or right at the same it is being raised or lowered, performing the two operations simultaneously.

SWING LEFT AND LOWER the boom by moving the control lever forward and to the left.

SWING LEFT AND RAISE the boom by moving the control lever back and to the left.

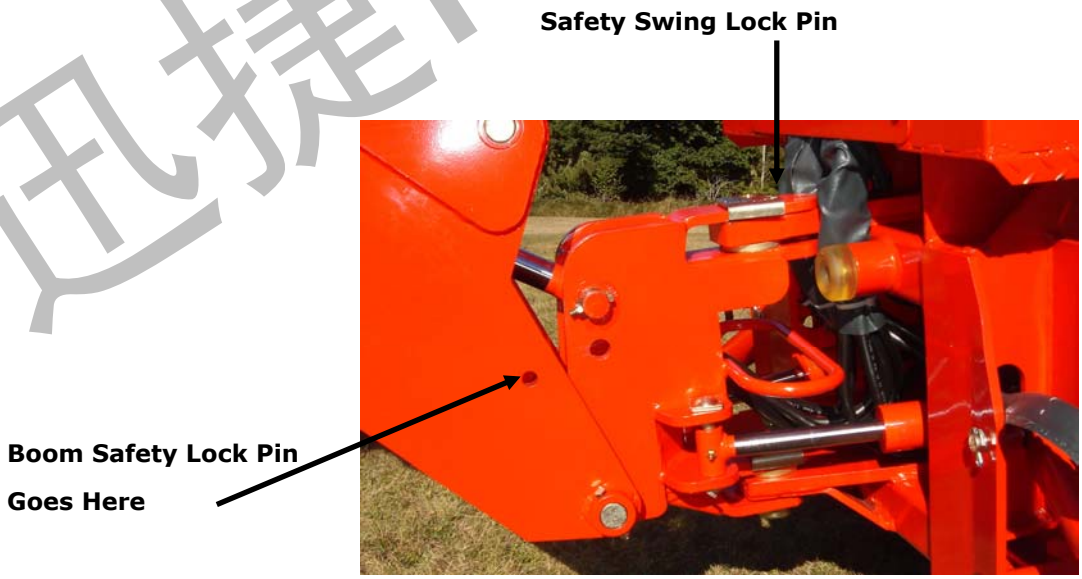

1. **SWING RIGHT AND LOWER** the boom by moving the lever forward and to the right.

2. **SWING RIGHT AND RAISE** the boom by moving the lever forward to the right.

3. **Left Hand Stabilizer:** Push lever downward, the LH stabilizer lowers. Pull lever upward, the LH stabilizer raises.

4. **Right Hand Stabilizer:** Push lever downward, the RH stabilizer lowers. Pull lever upward, the RH stabilizer raises.

5. **Crowed/Bucket:** Push lever forward, the dipper stick moves out, away from the operator. Pull lever back, the dipper stick moves in, toward the operator.

   Move lever to left, the bucket curls in. Move lever to right, the bucket extends out.

By moving the lever to one of the intermediate positions, the dipper stick can be extended or retracted at the same time the bucket is being loaded or dumped.

EXTEND AND LOAD the bucket by moving the lever forward and to the left.

RETRACT AND LOAD the bucket by moving the lever back and to the left.
EXTEND AND DUMP the bucket by moving the lever forward and to the right.

RETRACT AND DUMP the bucket by moving the lever back and to the right.

The two operations of the room lever, combined with the two operations performed by the bucket and dipper stick control lever, provide four simultaneous operations from the two levers, keeping cycle time to a minimum.

In general, the direction of movement of a control lever corresponds to the movement of the operating member.

Operating the Backhoe

CAUTION

To avoid possible injury, observe the following safety rules WHEN OPERATING the backhoe.

1. DISENGAGE safety locks as shown in Figure 3 before attempting to operate the backhoe. Store lock pins in holes provided in operator platform.

2. OPERATE from the backhoe operator's seat only.

3. LOWER the stabilizers until the rear of the tractor is totally supported by them. NOTE: Rear tires should not come up off of the ground.
See diagram on Page 11.

4. DO NOT dig near the stabilizers.

5. DO NOT touch overhead wires with any part of the backhoe.

6. DO NOT attempt to raise the tractor off the ground or move the tractor forward or backward using the backhoe dipper stick or bucket.

7. DO NOT lose stability by swinging the bucket Down hill when positioned on a slope.

8. DO NOT lower the backhoe boom using the "float" function. It will freefall, and could result in injury to bystanders or damage to the backhoe.

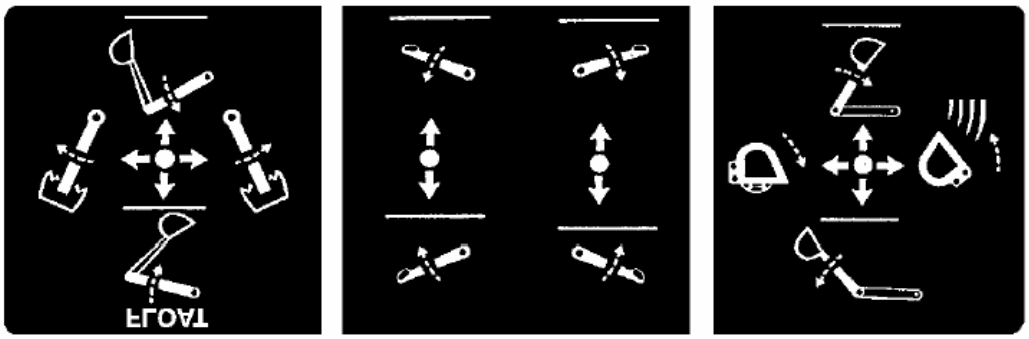

It is not difficult to become an efficient operator. Control lever operating decal is located on back of the control panel. Study this decal. It will assist you in becoming familiar with the controls.

Smooth, light handling of the controls will result in the most efficient backhoe operation.

Operate the backhoe control levers to become familiar with their speed and movements. The engine speed and the size of the hydraulic system will determine the speed of cylinder operation. When powering from tractor systems with higher output than required, reduce engine RPM to obtain acceptable backhoe operating speed.

Swing the boom several times to practice controlling the speed of swing. Do not operate the swing more than 45 each way for the first few times, then gradually increase the arc.

IMPORTANT: To avoid damage to the backhoe, do not slam swing unit into the rubber bumpers.

The boom "float" function may be used during digging to eliminate down pressure when cleaning the bottom of a trench. The primary purpose of the boom "float" function is to protect the operator from serious injury in the event that the backhoe or tractor hitch would fail.

Best results are obtained by digging near the center of the swing arc so material can be dumped on either side.

Best results are obtained by digging near the center of the swing arc so material can be dumped on either side.

As the operator becomes more familiar with the operation of the backhoe, it will be common practice to operate two controls at one time. For ex example, with the bucket extended and the dipper stick extended, the lift control and crowd control can be operated together to bring the bucket toward the operator with down pressure on it. As the dipper stick approaches the operator, the crowd and bucket controls can be operated to close the bucket and trap the material. At the end of the stroke, the lift and crowd controls are operated to move the load up and away from the operator to save time in clearing the excavation.

This dual operation of controls will speed and simplify the digging operation. Normally the two or more movements will not be equal or even simultaneous, but as the pressure within the cylinders changes, and the resistance on an operating member of the hoe lessens, it will begin to move. It is
balancing the force of one member against the other.

NOTE: Actuating the bucket is the key to powerful digging. Operating the crowd and bucket controls simultaneously will insure a full bucket and prevent waste motion and time.

Transporting the Backhoe:

IMPORTANT: To prevent serious damage to the tractor, read and follow the instructions on the following decal:

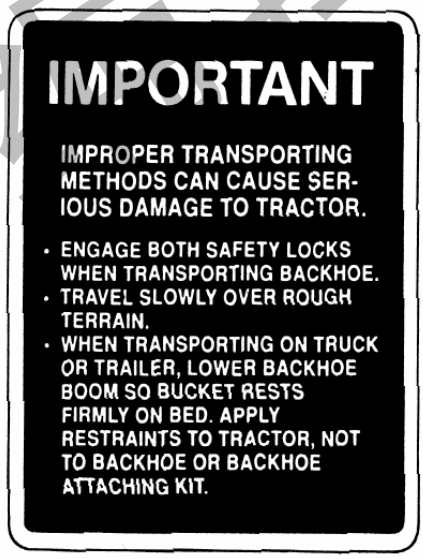

Location: Right Side of Boom

WHEN TRANSPORTING

Figure 4

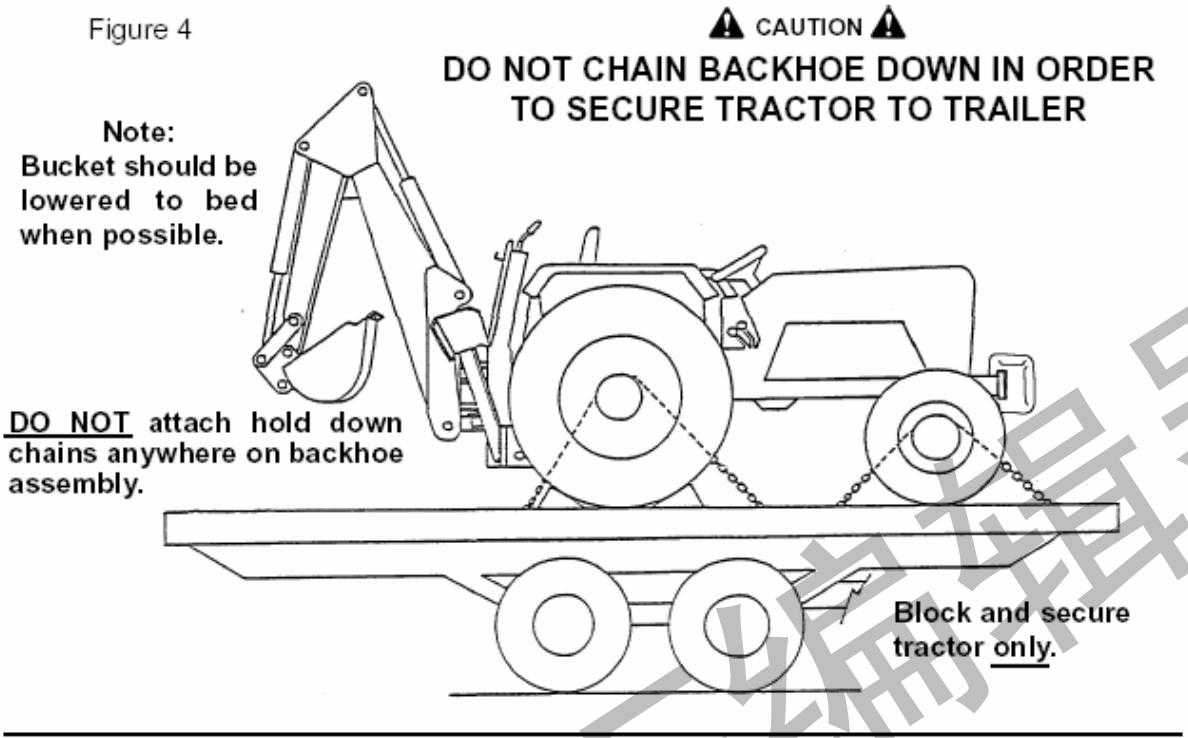

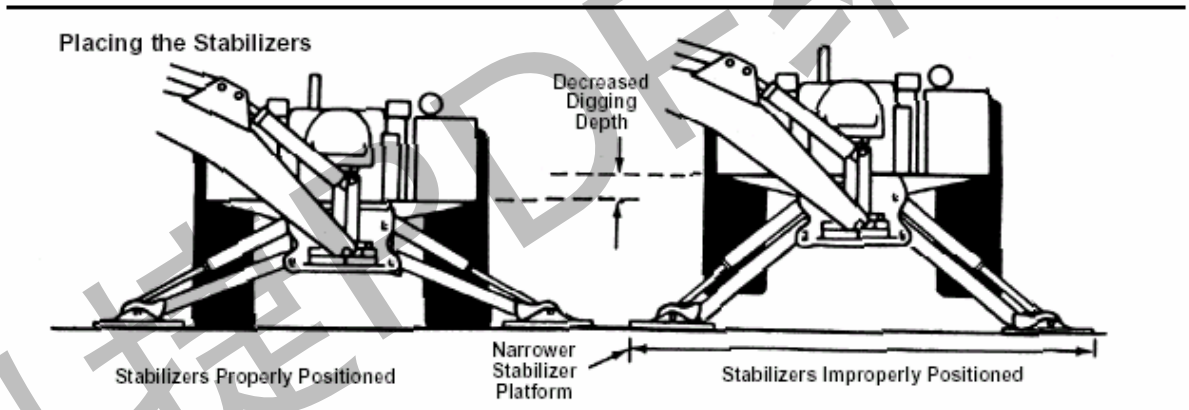

Set the stabilizers to remove weight from the rear wheels. The wheels are to remain touching the ground as this provides for the widest stabilizer stance and the lowest center of gravity. Raising the wheels off the ground will not only reduce stability and digging depth, but will perform and impose unnecessary stress

General Operations

FILLING THE BUCKET

Control the bucket attitude throughout the digging cycle to keep teeth at the proper angle for best penetration. This will minimize dragging and scraping through the ground.

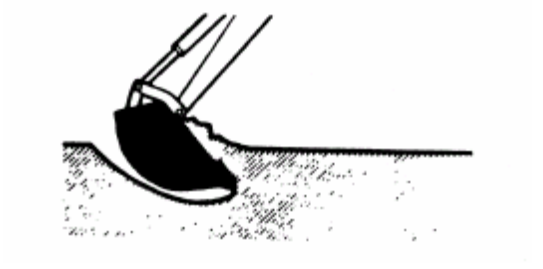

When digging in hard-packed soil, bucket penetration can be increased by applying down pressure with the boom while crowding in and curling the bucket. If the crowed action "stalls" it may be necessary to apply lift occasionally during the digging cycle to correct the bucket depth.

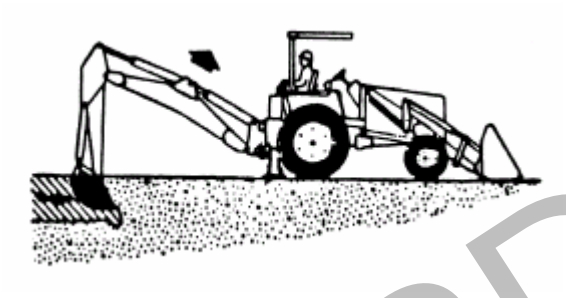

To obtain a cleaner trench and avoid the buildup of material directly in front of the backhoe, crowed out and completely curl the bucket while starting to lift it from the excavation. In this way, excess material will fall back into the excavation.

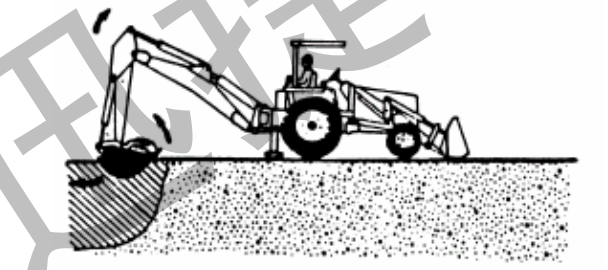

DUMPING THE BUCKET

To dump the bucket at the end of the digging cycle, lift the bucket clear of the trench while crowding it out and swinging it to the spoil pile.

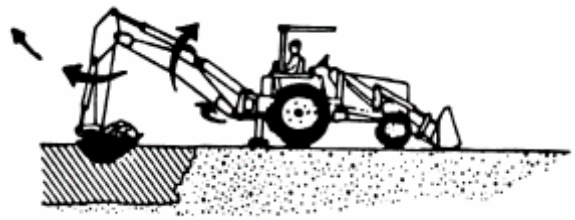

As the pile is approached, dump the bucket. When the bucket is empty, the dipper stick and bucket are in position to resume digging upon return to the trench.

IMPORTANT: Avoid constant jarring or hammering type contact between the spoil pile and the loaded bucket, as this may cause premature wear to the backhoe pins and bushings.

TRENCHING BETWEEN A BUILDING AND OPEN EXCAVATIONS

Start the trench at the building. Trench out halfway to the excavation. Then start trenching from the excavation to the first trench. Dig toward the first trench until there is just enough room to move the unit out between the two trenches.

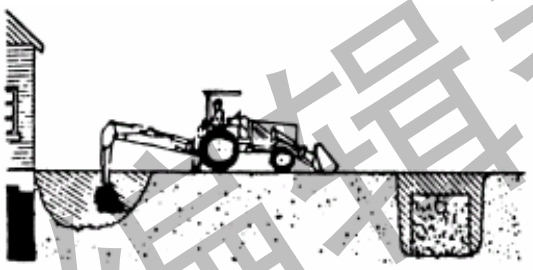

Position the unit so the backhoe swing post is over the centerline of the trench connection. Dig with the backhoe at extreme swing positions, and in as close to the stabilizers as possible. Pile the spoil on the opposite side of the trenches.

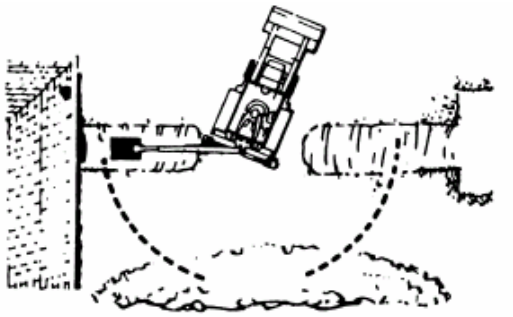

Position the unit forward with the lift and crowed levers so the two trenches can be connected. Pile the spoil on the opposite side of the trench.

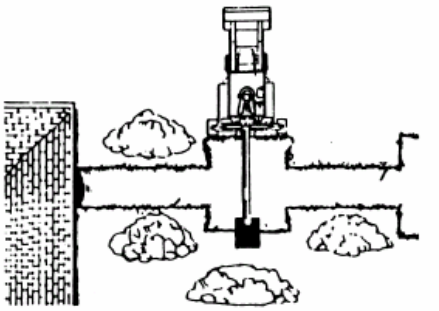

General Operations

SIDE SLOPE EXCAVATING OR TRENCHING

Dig with backhoe uphill whenever possible.

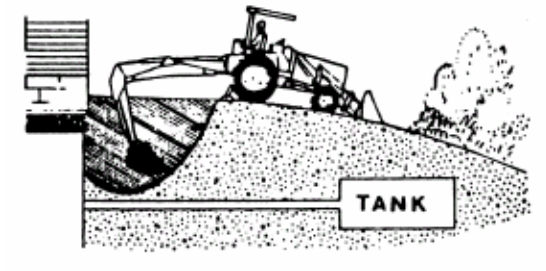

Level the backhoe on slops with the stabilizers to dig plumb trenches, or use the backhoe or loader to cut a level slot for the uphill wheel and stabilizer. Pile the spoil from the slot on the low side.

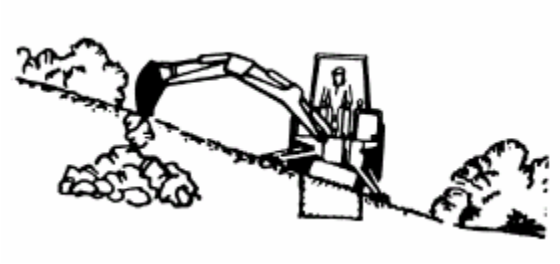

When on the side of a steep slope, cut a level surface along the uphill side of the trench with the loader.

Pile the spoil of the cut downhill. When digging, pile the spoil of the trench uphill.

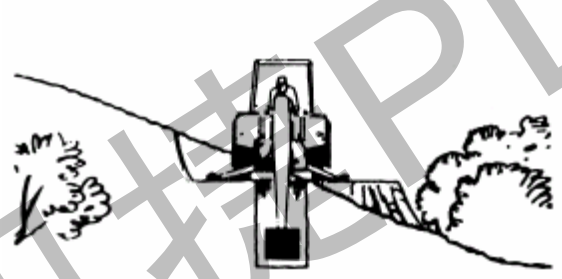

Dig field trenched progressively. As soon as one trench is completed, have the workmen lay the tile. Start the next trench, using the spoil to fill the previous trench.

MISCELLANEOUS

When finishing straight walls or bell holes in sandy soil, use a platform under the rear tires and stabilizers. The platform distributes the load over a larger area and lessons the possibility of a cave-in. The platform also tends to keep the unit from creeping rearward if hard digging is encountered.

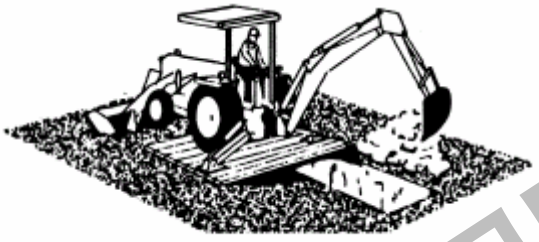

FINISHING STRAIGHT WALLS

Finish the far wall by crowding out while forcing the bucket down from the boom. Actuate the bucket (curl out) to keep the bottom of the bucket vertical.

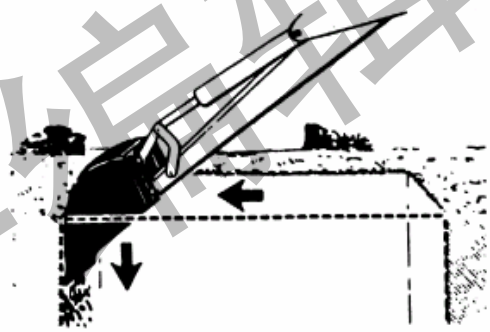

To finish the near wall, lift up and crowd in. Keep the edges of the bucket horizontal.

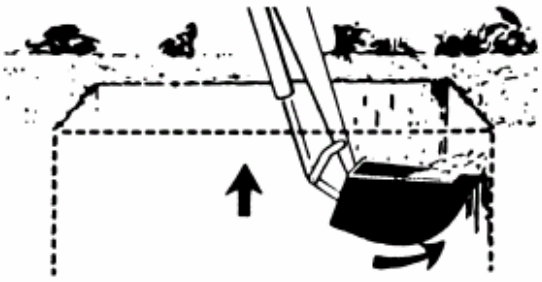

BACKFILLING

Backfill by lifting the bucket over the spoil pile and then crowding in. Pull both the crowd and lift levers for smooth, even backfilling.

IMPORTANT: Do not backfill by using the swing circuit and dragging the bucket sideways. Doing so can cause damage to the dipper stick boom swing cylinders or mainframe.

Service

CAUTION
To avoid possible injury, observe the following safety rules WHEN SERVICING the backhoe.

1. ENGAGE safety locks as shown in figure 1 & 3 before servicing the backhoe.

2. DO NOT oil, grease or adjust the backhoe while it is in motion.

3. DO NOT change any backhoe relief valve setting. They are factory set for best performance and safety.

4. ESCAPING FLUID under pressure can have sufficient force to penetrate the skin and cause serious injury. Be sure to relieve all pressure before disconnecting lines. Be sure all connections are tight and that lines, pipes and hoses are not damaged before applying pressure to the system.

5. FLUID ESCAPING from a very small hole can be almost invisible. Use a small piece of cardboard or wood not your hands - to search for suspected leaks.

6. SEE A DOCTOR AT ONCE if injured by escaping fluid. Serious infection or gangrene can develop if proper medical treatment is not administered immediately.

7. PROTECT YOUR EYES - Wear safety glasses. Guard against injury when driving connecting pins or performing any repair in which particles can chip from work piece or striking tool.

BEGINNING OF SEASON
Remove all protective covering.
On the PTO pump contained system, maintain the reservoir oil at the proper level by looking at the oil gauge. When checking oil level, the backhoe should be extended to full reach with the bucket rolled back and resting on the ground. All cylinders are retracted except for the boom cylinder. Do not overfill: oil may be forced out of the breather cap.
Change PTO Reservoir Hydraulic Oil and Filter every 200hrs, or earlier if neccessary.

Fill Reservoir with: SAE 10W40 engine oil with API "SF/SG" classification in northern climates. AW32

Fill Reservoir with: SAE 40W engine oil with API "SF/SG" classification in southern climates or AW42
Or Reservoir oil should be a all purpose tractor hydraulic oil, or AW32/AW42 is another good choice.

Check hydraulic hoses for deterioration and replace, if necessary.

Lubricate all grease fitting and oil handle linkage. Check hydraulic system for loss of fluid and, if necessary, fill to proper level, or replace it if contaminated. Tighten all loose bolts, nuts and set screw.

Inspect bucket teeth and, if necessary, sharpen or replace them.

Operate the backhoe slowly for a short time before full time operation, to get used to the controls, and also checking for hydraulic leaks, before placing the unit under full load.

Bleeding Backhoe Hydraulic System
If the hydraulic hoses have been disconnected from the backhoe or tractor, all trapped air must be

removed after the hoses are connected. Start tractor engine and operate backhoe through all movements fully, several times, to purge the system of air.

Hydraulic System Hoses
Oil leaks in the pressure side of the system can be located by carefully inspecting the external area of the hoses and fittings.

Check the return side of the system for leaks by examining the oil in the reservoir. If air is being drawn into the system, the oil will contain air bubbles and appear to foam.

When tightening connections, always use two correct size wrenches.

IMPORTANT: Do not over-tighten fittings. Make them just tight enough to eliminate leaks.

NEVER use teflon tape on pipe thread fittings. Always use a paste type sealer.

Hoses on any backhoe are very severely worked and will fail in time. Examine them regularly and replace any that show signs of failure. Pay careful attention to the routing of hoses so they can move fully and freely without kinking, and cannot be pinched or cut by any part of the backhoe.

Figure 5

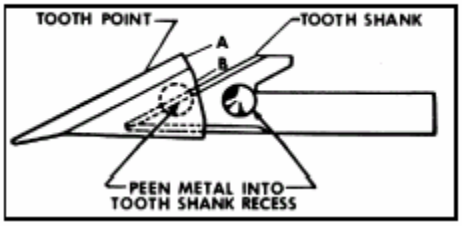

The bucket tooth points are self-sharpening and will require little attention; however, these points on the bucket shanks can be replaced when they become badly worn or broken.

A tooth points can be removed from the welded tooth shank by hammering at "A" (Figure 5) on the tooth point or by driving a chisel at "B", just between the tooth point box section and the tooth shank. Install the new point and anchor it to the shank by peening at the location shown.

If a tooth shank breaks off, becomes damaged or lost so that it cannot hold a tooth point, a new shank should be welded to the bucket in its place. **The newer Style are now bolted on.**

Tightening Nuts and Bolts

Periodically, check to be sure all bolts and nuts are tight. See torque chart, page 43.

Check all pivot pins for cotter pins, washers and retainers; if missing, replace.

Lubrication

Economical and efficient operation of the backhoe is dependent upon regular and proper lubrication of all moving parts with a quality lubricant.

All parts fitted with grease fittings should be lubricated with a good quality chassis lube type grease. If any grease fittings are missing, replace them immediately. Clean all fittings thoroughly before using grease gun.

Lubricate all grease fittings at least twice daily, once at the beginning of operation and again approximately

halfway through the work day.

Lower stabilizers to the ground, extend dipper stick and bucket and lower boom so bucket rests on the ground as shown in Figure 7. Refer to these illustrations for the location of all grease fittings.

**IMPORTANT: Before greasing boom to swing frame pivot (*) shown in Figure 7, raise boom and install boom safety lock pin shown in Figure 1.*

The following locations should be oiled with SAE 30 oil:

A. Stabilizer Pivot Pins
B. Control Handle Linkage
C. Seat Bracket Pivot
Hydraulic Oil: Most any all purpose Tractor Hydraulic oil can be used, AW32 / AW42 is good.

IMPORTANT: Avoid excessive greasing. Dirt collects on exposed grease and increases wear greatly.

After greasing, wipe off excessive grease from fittings.

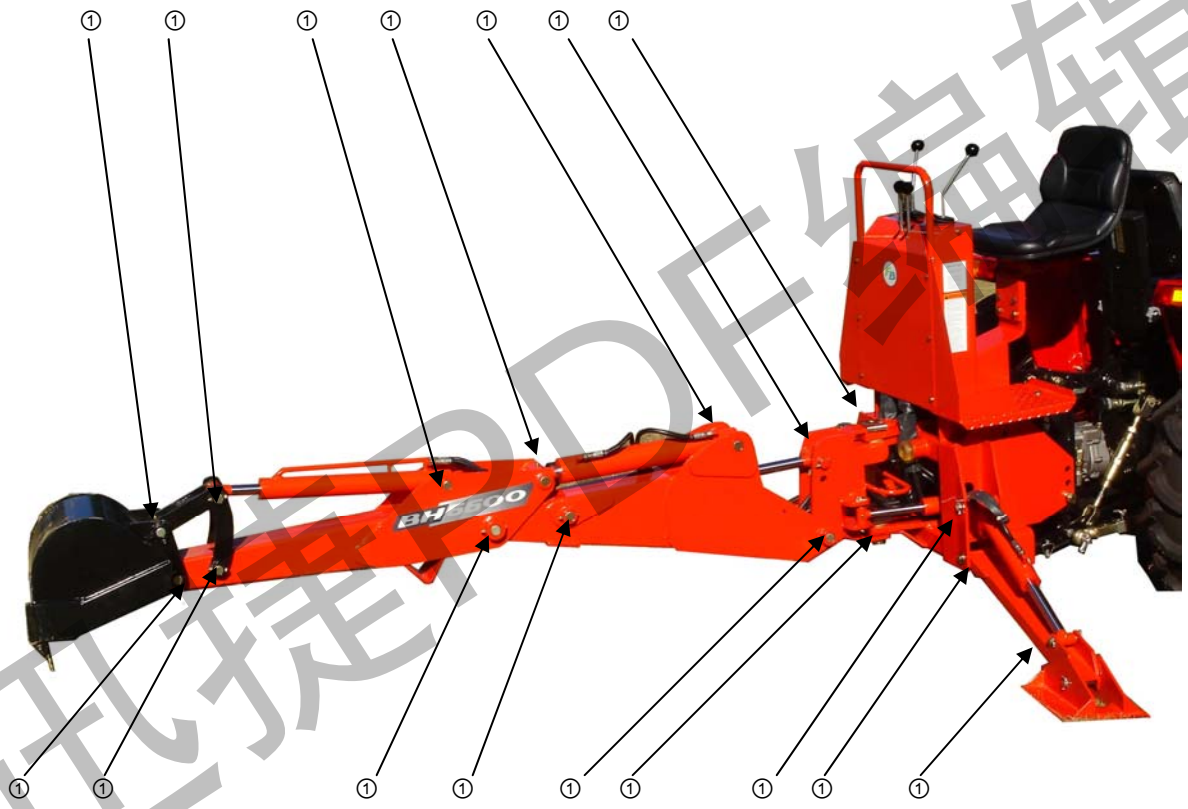

Figure 5 –Lubrication Points

INSTALLATION AND REMOVAL
Tractor Preparation
1. Remove rockshaft center link.
2. Remove the sway links, lift links, and draft links.
3. Remove drawbar.

The backhoe can be self-assisting during the installation and removal procedures.

Installing an Assembled Backhoe on a Tractor

IMPORTANT - Consult the "General Operation" section for proper use and terminology when installing this backhoe.

1. Center sub frame between tractor rear tires and carefully back over sub frame until hydraulic hoses are close enough to connect.

2. Stop tractor and set park brake.

3. Disconnect tractor pressure line hose from tractor power beyond hose at rear of tractor. Connect backhoe pressure line hose to tractor pressure line hose. Connect return hose of backhoe to tank line of tractor, located on right hand side of tractor, under rockshaft arm.

⚠ DANGER ⚠
The only time the backhoe should be operated from a position other than the operator's seat is during the backhoe installation and removal process.

- Engage Swing Lock Pin
- Always stand away from the backhoe stabilizer legs and along side of the tractor rear tires.

⚠ CAUTION ⚠
Route hydraulic hoses carefully to prevent damage.

4. Start tractor, set throttle at low idle, remove parking brake.

5. Using backhoe hydraulics in the boom and stabilizer leg circuits, raise sub frame enough to align hooks on sub frame with Tractor lower 3-point hitch connection points.
IMPORTANT - As you raise unit, you will need to alternate back and forth between the boom and stabilizer circuits. This procedure is needed to keep the front of the sub frame (under the loader mount) as close to the ground as possible.

6. Roll or drive tractor back until hooks are fully engaged into lower 3-point hitch connection points.

7. Making sure that the Lock Pins and pivoting latches are out of the way in the front of the sub frame, pivot sub frame up into the Loader Mount Weldment.
Again, this is accomplished by using the boom hydraulics.

8. Shut off tractor and engage parking brake.

9. Secure pivoting latches using Lock Pins and Hair Pin Clips.

Testing Backhoe Hydraulic Hook-Up
1. Start the tractor.
2. Exit the tractor.
3. Sitting in the backhoe operator's seat raise and lower the stabilizer legs and extend and retract the dipper stick.
4. Exit backhoe, stop engine, and check hydraulic fluid level in tractor.

Removing Assembled Backhoe from Tractor-
1. Start tractor engine, engage park brake, place throttle in low idle position, and exit tractor.
2. Remove Swing Lock Pin from its storage location and install in backhoe.
3. Remove Lock Pins and Hair Pins Clips from front of sub frame. Pivot latches forward to disengage from loader mount.

4. Pivot sub frame down until the sub frame clears the Loader Mount Weldment.
Again, this is Accomplished by using the boom and stabilizer circuit hydraulics.
5. Flip up pivoting latches and reinstall Lock Pins and Hair Pin Clips for storage Purposes.
6. Continuing to use the boom and stabilizer circuit hydraulics, raise sub frame slightly at the Tractor lower 3-point hitch connection points to take the sub frame weight off of the pins.

IMPORTANT - Watch that hydraulic hoses to backhoe are not kinked or pulled tight.
7. Drive tractor ahead just enough (5" to 6") to clear sub frame hooks from the Tractor lower 3-point hitch connection points.

8. Again, using boom and stabilizer circuit hydraulics lower backhoe and sub frame to the ground.

9. Shut off tractor, engage parking brake, then disconnect hydraulic hoses from backhoe.
10. Reconnect tractor pressure line hose to tractor power beyond hose, located just above PTO master shield.

NOTE: For long term storage, coat exposed cylinder rods with grease.

Stabilizer Pads
The backhoe is supplied with flip-over stabilizer pads as standard equipment. They are suitable for most backhoe work and generally are all that is ever required. However, Street pad kits are available as an option. This kit bolts to the standard pads and increase the versatility of the backhoe. See figure 10.

Figure 10

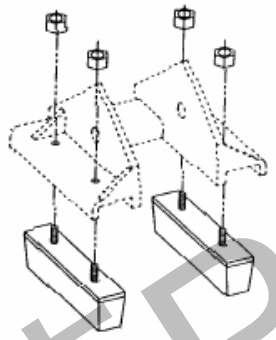

Hydraulic Trouble Shooting
The trouble shooting material presented in this section is offered as a guide to diagnosing probable causes and remedies for general operational problems. Match your problem with the typical problem examples given, and note the numbers given for the possible cause. These numbers correspond with the possible cause and correction paragraphs that follow.

NOTE: When using the following chart, if it is decided that an overhaul of components or pressure adjustments are necessary to correct malfunctioning, it is recommended that your dealer make these repairs. He is equipped to do this work.

⚠ WARNING ⚠
Escaping hydraulic / diesel fluid under pressure can penetrate the skin causing serious injury.
Do not use your hand to check for leaks. Use a piece of cardboard or paper to check for leaks.
Stop engine and relieve pressure before connecting or disconnecting lines.
Tighten all connections before starting engine or pressurizing lines.
If any liquid is injected into the skin, obtain medical attention immediately or gangrene may result.

Problems and Possible Causes

1. Machine fails to operate when started initially -1, 2, 5, 7, 16, 24
2. Machine loses power after operating satisfactory initially - 1, 8, 10, 14, 16, 24
3. Loss of power in lift or crowd cylinder, but other cylinders function properly - 23, 25, 30

Problems and Possible Causes, Continued

4. Loss of power in any one cylinder including lift and crowd - 8, 9, 10, 11, 12, 13, 23, 25, 26
5. Loss of power in swing cylinders, but other cylinders functioning property - 8, 9, 10, 11, 12, 13, 23, 24, 26
6. Maximum swing action cannot be obtained - 12, 15.
7. Slow operation of machine (lack of power) all cylinders - 1, 4, 6, 14, 16, 24
8. Spongy or jerking action of cylinders and/or noisy operation - 1, 3, 4, 5
9. Lift, crowd or bucket cylinders drop under load when control spools shifted from neutral - 28, 30
10. Load drops or settles - 8, 10, 13, 26, 28
11. Leaky cylinders - 10, 11, 12, 13
12. Leaky valve - 8, 16, 17, 29
13. Sticky valve spool - 17, 20, 21, 22
14. Unable to push valve spool in - 17, 18, 20, 21, 22
15. Spring centered spools do not return to neutral- 17, 18, 19, 20, 21, 22

Causes and Corrections

1. Low oil supply in reservoir - fill to proper level.

2. No oil supply to machine - oil is not being diverted from the prime mover hydraulic system. Be sure that the proper controls are actuated on the prime mover.

3. Air in system - bleed all circuits of air by operating machine at maximum oil flow and through full movements.

4. Oil viscosity too heavy, or oil is not at operating temperature - use recommended hydraulic fluid. Run machine until oil reaches operating temperature.

5. Pump not running - check pump drive to be sure it is engaged.

6. Insufficient pumping - advance engine throttle.

7. Improper hose connection - **IMPORTANT: Be sure inlet and return hoses are hooked up correctly Improper hook-up will result in damage to the backhoe valve.**

8. Loose oil line connections, leaks in line or broken lines - tighten all hose connections and replace and damaged O-ring at leaking O-ring fittings. Check and replace any damaged hoses and lines.

9. Restrictions in oil line - check and replace any damaged hoses and lines. Check for pinched hoses.

10. Oil is bypassing cylinder piston, scored piston, worn piston packing, or defective piston assembly replace or rebuild the cylinder; replace damaged parts.

11. Scored piston rods and worn rod guides in cylinder - replace or rebuild the cylinder; replace damaged parts.

12. Bent piston rod in cylinder - replace or rebuild the cylinder; replace damaged parts.

13. Worn or damaged rod seals on cylinder; external repack cylinder. Rebuild cylinder, replacing damaged parts as necessary.

14. Diverter valve on prime mover leaking externally or bypassing oil internally through valve to reservoir

diverter valve may need rebuilding or replacing.

15. Something jamming the swing linkage – remove interference.

16. Excessive back pressure - relief condition. May be restriction from outlet to reservoir.

17. Paint on valve spool; sticking valve spool or scored valve spool - clean valve spool. Binding is usually caused from an over tightened plug, mounting bolt, fitting in valve body or tie rod bolt. If a plug or fitting in the valve body is leaking, do not over tighten in an effort to stop leak. This will distort body casting and cause spools to bind. Instead, the plug and fitting should be removed from valve body and be reconnected, using a new O-ring. Do not apply excessive pressure on mounting bolts. The rods should be torqued to 20 ft./lbs. Never force spool, if binding occurs see item 30 at the end.

18. Oil leakage past spool seal into spool cap remove cap. If it contains oil replace spool seal O-rings. Check O-ring retainer to be sure it is flat. If it has been "belled" check for restriction from outlet to reservoir of valve which would cause excessive back pressure. See item 30 at the end and item 9.

19. Broken return springs - replace springs, see item 30 at the end and Figure 11.

20. Bent spool - replace with new spool section. See item 30 at the end.

21. Foreign particles - clean system and valve.

22. Misalignment of control handle linkage – check linkage for binding condition.

23. Spool not moved to full stroke - check travel, should be 5/16" either way, or a total of 5/8". See item 30 at the end.

24. Relief valve setting in backhoe control valve too low or defective - relief pressure will have to be checked and corrections made. Backhoe system pressure is 2100 psi. Relief valve may need cleaning and overhauling, or entire cartridge must be replaced. See item 30 at the end.

25. Overload relief valve in the control valve stuck open or malfunctioning - clean relief carefully but do not disturb its pressure setting as it cannot be field calibrated, or replace cartridge. See item 30 at the end.

26. Worn control valve - replace the control valve.

27. Check proper in the control valve not holding clean check poppet(s) carefully, being sure that it moves freely with good spring action and seats properly or replace. See item 30 at the end.

28. Damaged or worn spool seals - replace spool end seals, see item 30 at the end.

29. Ball in check valve is stuck or not seating properly - clean anti-cavitation valve carefully, being sure that checks move freely and seat properly, or replace cartridge. See item 30 next.

30. Problems involving the control valve proper:
This valve is a precision device and is not intended for any extensive field adjustment or repair. Field replacement parts are limited to seal kits, cartridges, valve sections and tie rods. Replacement of these parts, the opening of check cavities and certain relief valve cavities to examine for trapped dirt, or the resetting of the main relief valve with the use of good pressure gauge, should be referred to qualified service personnel.
Dirt and shreds of packing material are the usual causes of valve malfunction. Be sure the reservoir oil supply is kept clean and only factory supplied packings are used in cylinder repair. Everything must be clean and free of dirt during the oil line removal and replacement, and during any cylinder work.

Pages 19 and 20, Valve Repair-disassemble explain the procedure to follow for valve repair.

The inclusion of this information and its use does not imply that the warranty will remain effective on the valve if it is tampered with during the warranty period.

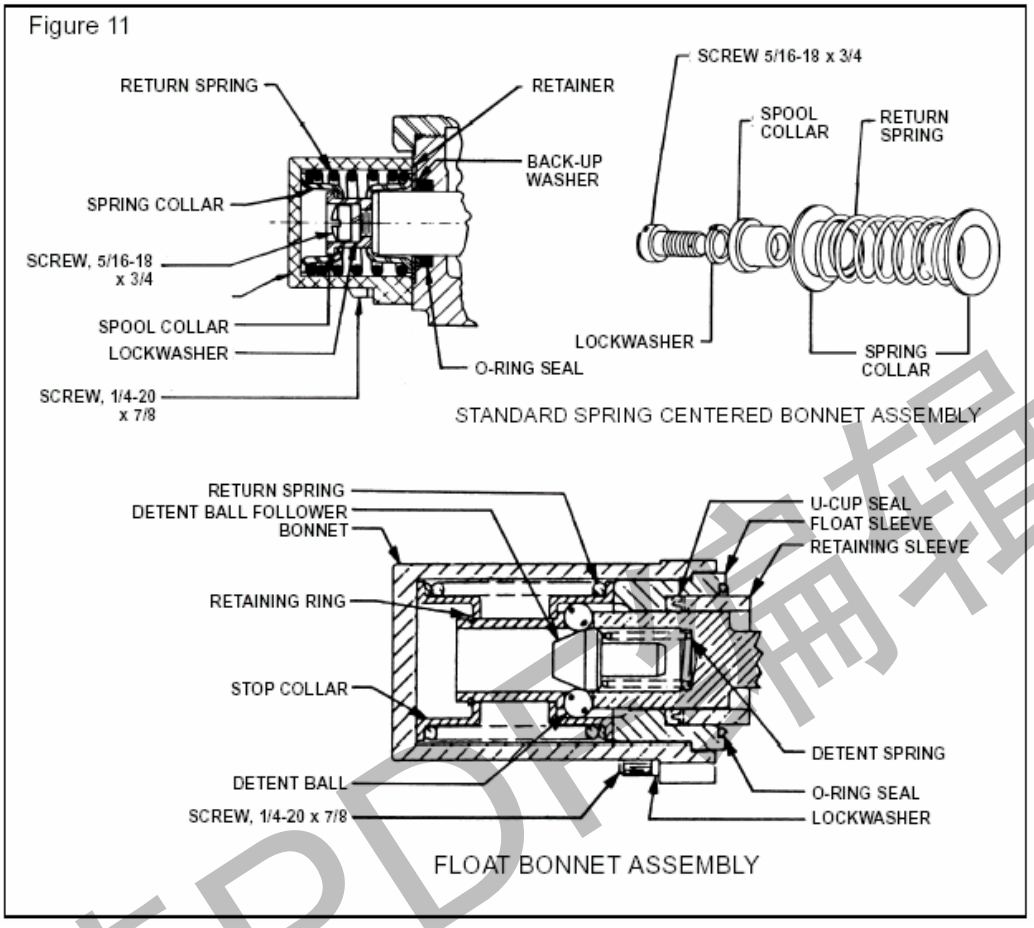

Replace Center Section Assemblies:

Note: For the purpose of these instructions we will consider the section containing the MAIN RELIEF VALVE as the left side of the valve.

1. Remove control valve from the backhoe.

2. Thoroughly clean the exterior of the valve before beginning disassembly procedures.

3. Since the valve will be assembled in the same order, each section should be marked numerically so that they can be reassembled in the same sequence.

4. Mount the valve vertically in a vise to facilitate disassembly and assembly.

5. Remove the 3 tie rod nuts from the right end section, using a thin-wall socket.

6. Valve sections can now be removed by sliding the sections along the tie rods.

7. Thoroughly clean the O-ring counterbores and the ground surfaces of each section. Place O-ring seals, ordered as a kit, in proper counterbores. For better sealing it is recommended that all O-rings, used in the counterbores, are replaced with new parts.

8. Replace the sections on tie rods with the O-ring counterbores facing the right end of the valve. Be careful replacing the sections so that the section O-rings are not moved from the counterbores.

9. When all sections are assembled on the tie rods, tighten the tie rod nuts equally to 20 ft. lbs . torque, NO MORE - NO LESS, or spool may bind and stick.

Replacing Spool Seals:

Note: For the purpose of these instructions we will consider the control handle side of the valve as the FRONT, and the opposite side as the BACK.

1. Remove control valve from the backhoe.

2. Thoroughly clean the exterior of the valve before beginning disassembly procedures.

3. At the BACK of the valve remove all bonnet assembly parts which are connected to the spool. Keep parts in the order of disassembly. See Figure 11 for the parts involved in the make-up of the bonnet assembly.

IMPORTANT: DO NOT remove the spool from the valve. The seals can be replaced externally. Prevent spools from turning or moving by inserting a screw driver through the clevis slot, or by running a rod through the pin hole and using the rod as a handle. DO NOT hold the spool with a wrench. This will destroy the finish.

4. At the BACK of the valve, remove seal retainer, back-up washer, and spool O-ring seal, or retaining sleeve, bonnet O-ring seal and spool U-cup seal.

5. Thoroughly clean counter bores.

6. Install new seals:

A. Spring-Centered Bonnet Assembly Only: Lightly oil new O-ring seal. Slide O-ring seal over valve spool and insert in seal counter bore. Replace back-up washer and seal retainer.
B. Float Bonnet Assembly Only: Replace retaining sleeve on valve spool. Lightly oil new U-cup seal. Slide U-cup seal over valve spool being careful to orient seal as shown in figure 11. install new O-ring seal in bonnet counter bore.

7. At the BACK of the valve replace bonnet assembly parts, reversing the order in which they were disassembled in step 3. Use 12 ft. lbs. torque to tighten assembly screw on spring centered bonnet assembly.

8. At the FRONT of the valve remove all parts connected to the spool (handle, linkage, etc.).

9. At the FRONT of the valve remove seal plate retainer, seal retainer, back-up washer and spool O-ring seal.

10. Thoroughly clean counter bore.

11. Lightly oil new O-ring seal. Slide O-ring seal over valve spool and insert in seal counterbore. Replace back-up washer, seal retainer, and seal plate retainer.
12. Reattach all parts connected to the spool (handle, linkage, etc.).

ASSEMBLY

Basic components for all models can be identified in Figure 12.

CONTROL VALVE SECTION

Typical Section for Actuate (Bucket) & Swing Circuits)
*Cv126 VALVE PART LIST for the BH6600 Control Valve

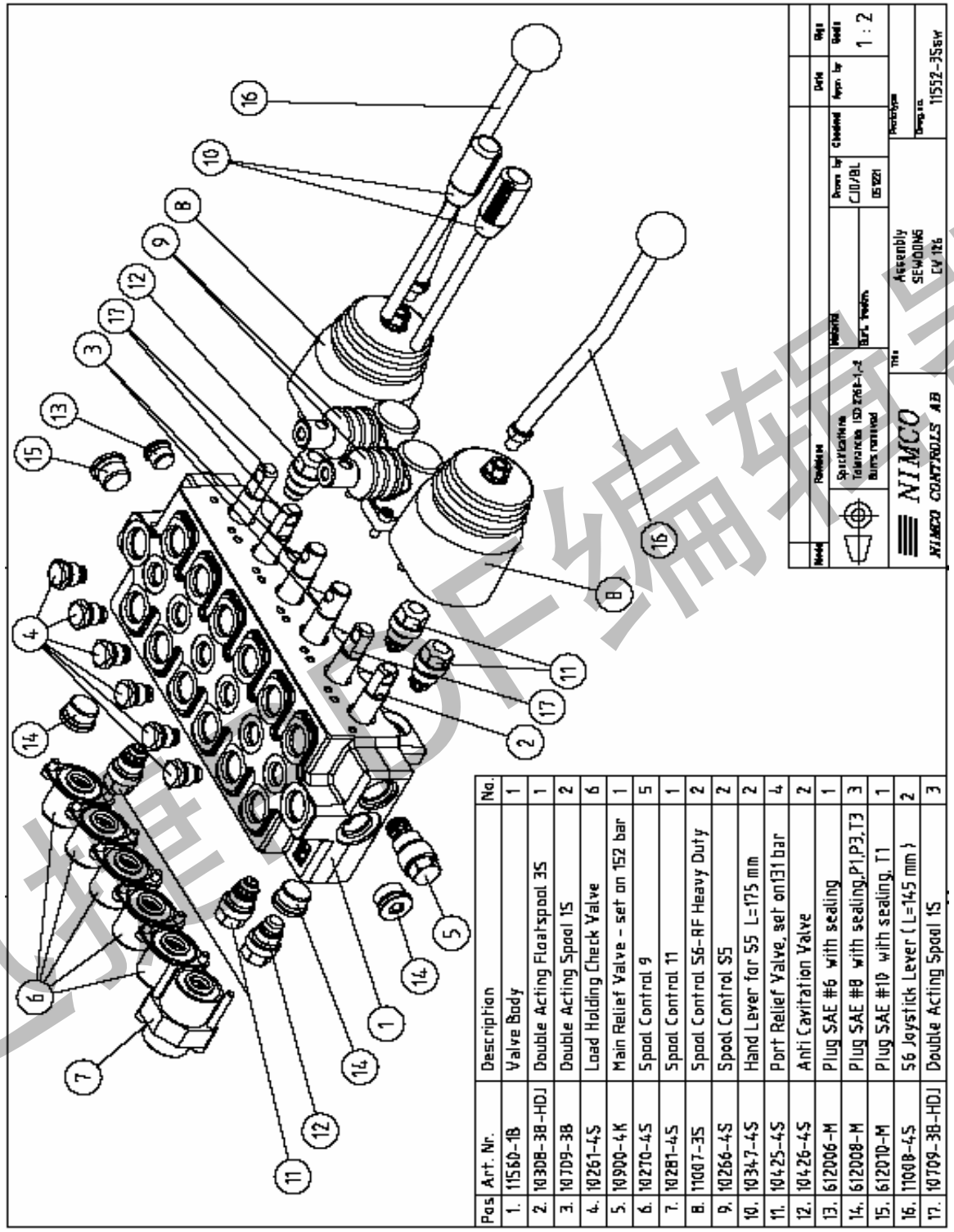

Pos	Art. Nr.	Description	No.
1.	11560-1B	Valve Body	1
2.	10308-3B-HDJ	Double Acting Floatspool 3S	1
3.	10709-3B	Double Acting Spool 1S	2
4.	10261-4S	Load Holding Check Valve	6
5.	10900-4K	Main Relief Valve - set on 152 bar	1
6.	10270-4S	Spool Control 9	5
7.	10281-4S	Spool Control 11	1
8.	11007-3S	Spool Control S6-RF Heavy Duty	2
9.	10266-4S	Spool Control S5	2
10.	10347-4S	Hand Lever for S5 L=175 mm	2
11.	10425-4S	Port Relief Valve, set on131 bar	4
12.	10426-4S	Anti Cavitation Valve	2
13.	612006-M	Plug SAE #6 with sealing	1
14.	612008-M	Plug SAE #8 with sealing,P1,P3,T3	3
15.	612010-M	Plug SAE #10 with sealing, T1	1
16.	11008-4S	S6 Joystick Lever (L=145 mm)	2
17.	10709-3B-HDJ	Double Acting Spool 1S	3

*CV556 VALVE PARTS LIST That Comes with the BH7600

Pos	Art. Nr.	Description	No.
1.	10169	Inlet Body	1
	10199	Alternativ Inlet Body	
2.	11032-18	Work Section Body	6
3.	10156	Outlet Body	1
	10140	Alternativ Outlet Body	
4.	381-4061	Float Spool	1
5.	68-5599	Double Acting Spool	5
6.	65-5587-A	Load Hold Check A-side	6
7.	65-5587-B	Load Hold Check B-side	6
8.	25-40103	Enclosed Lever 55	2
9.	65-4141	Spool Control 9	5
10.	10812-35	Mech. R H Joy Stick	2
11.	65-40286	Spool Control 11	1
12.	65-5581	Port Relief Valve	4
13.	65-5583	Anti Cav. Valve	2
14.	65-5584	Port Relief Cav. Plug	6
15.	65-5611	Section Sealings	7
16.	10142	Unload Cav. Plug	1
17.	65-4429	Main Relief Valve	1

Pos	Art. Nr.	Description	No.
18.	612010-M	SAE #10 Plug	2
19.	45-4071	Main Relief Cav. Plug	1
20.	612008-M	SAE #8 Plug	1
21.	68-5599-6Thin	Tie Rods	3
22.	5300101	Tie Rod Locking Nuts	3
23.	10361-45	Hand Lever	2
24.	Plastic Strip	6K-40324	2
25.	45-4364	Spool Sealing	8

Note
1) Dimensional drawing No. 15-5127 media A

NIMCO
NIMCO CONTROLS AB
Assembly
CV 556
Sveaveg, Hova
25-5137 SW
1 : 2

General Unpacking
The backhoe has been partially disassembled and strapped to a skid for shipping purposes. Initial installation on the tractor will require a hoist or other device capable of safely lifting the entire backhoe from the skid. After the initial installation is complete, the backhoe can serve as its own erecting hoist, by lowering stabilizers and bucket to the ground. Additional lifting devices will not be required for normal removal and reattaching.

Assembly - Figure 12
IMPORTANT: Tighten all hardware to torque requirements specified in torque chart.

1. Remove the stabilizer assemblies and any miscellaneous items which have been fastened to the skid and arrange conveniently. Reposition stabilizer cylinders from their shipping configuration (See Fig. 12A), by assembling them into the Mainframe, using pins and hardware provided. Be sure cylinder ports are pointed upward and hoses are routed above the cylinder to mainframe pivot pin connection. See Fig. 12B.

⚠ CAUTION ⚠
DO NOT cut any strapping that fastens the backhoe mainframe and swing frame to the skid base at this time.

CAUTION
Be sure hoist being used is suitable, has sufficient capacity and is in the proper position. Do not allow anyone under a backhoe member supported by hoist.

2. Support boom(A) and dipper stick(B) with hoist and remove boom transport lock pin. Lower boom and manually extend dipper stick until it rests on ground. Move control handle to "BOOM DOWN" position as required to aid movement.

4. Attach Bucket Link (E) to Bucket, using same hardware as listed for step #3.

6. Attach Stabilizers (F) to Mainframe (G) using pins and hardware assembled to Stabilizers (F).

CAUTION
Be sure hoist being used is suitable, has sufficient capacity and is in the proper position. Do not allow anyone under a backhoe member supported by hoist.

3. Remove plastic bag containing bucket pins from backhoe. Attach Bucket (D) to Dipper stick using one pin, two bolts, locknuts, pin retainers, and washers as needed to take up gap under pin retainers.

5. Reposition hoist on backhoe to prevent tipping and raise Mainframe slightly. Remove all remaining strapping and skid. Using caution to prevent tipping raise Mainframe (G) approximately 10" and block Mainframe and Swing Frame securely.

7. Attach Stabilizer Cylinders (H) to stabilizers (F) using pins and hardware assembled to stabilizer (F).

8. Follow the Mount Kit Instructions section of the Operator's Manual. Check the installation carefully and make sure that all members are correctly installed and securely fastened.

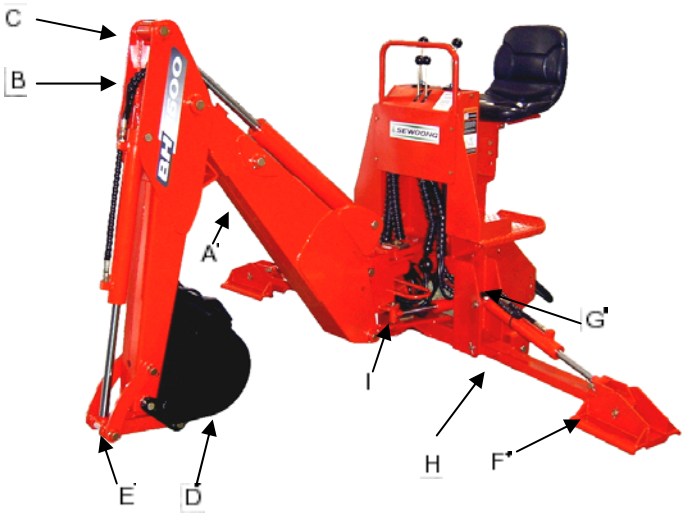

Packing may be different than below, as we are always trying to improve, to maximize space and prevent damage during shipping.

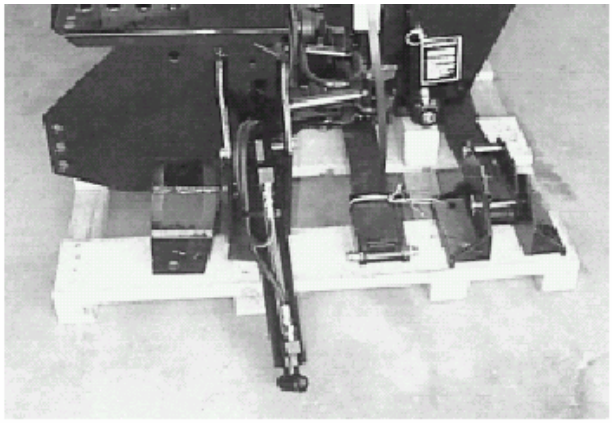

Figure 12A

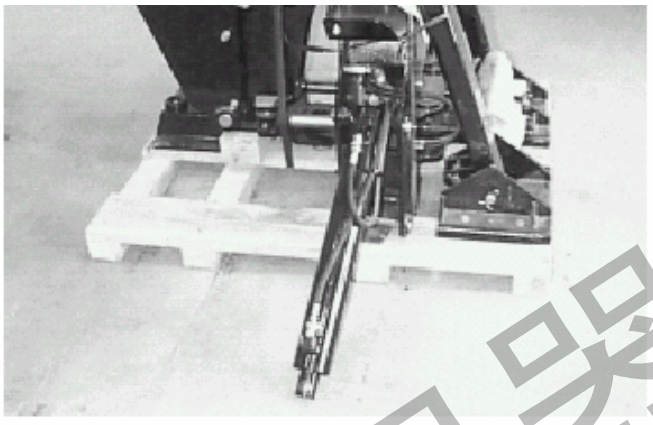

Figure 12B

HYDRAULICS and MOUNTING KITS
SUB FRAME & 3 POINT HYDRAULIC HOOK-UP TO THE TRACTOR & HYDRAULIC SYSTEMS

Warning! If the control valve is piped wrong you will damage the valve this will void the valve warranty. If using your Tractor Hydraulics it must have a filter installed on the return system, if not, it will void any warranty. Please contact your dealer for help. The factory installed PTO pump with reservoir does not come with a check valve, a check valve is only needed when the hydraulic lines are connected directly to the tractor hydraulic system.

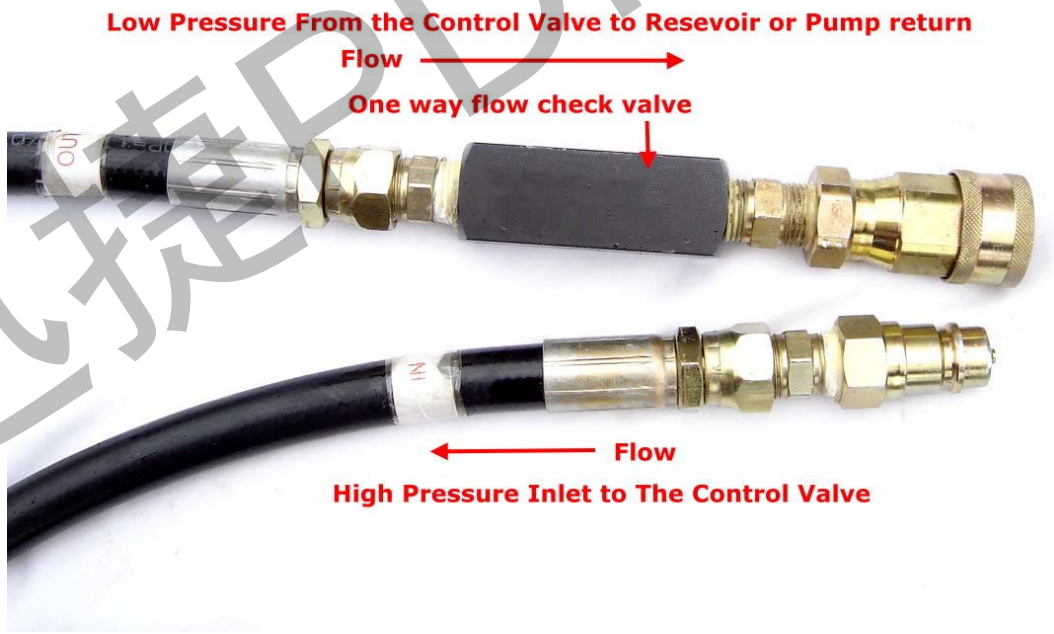

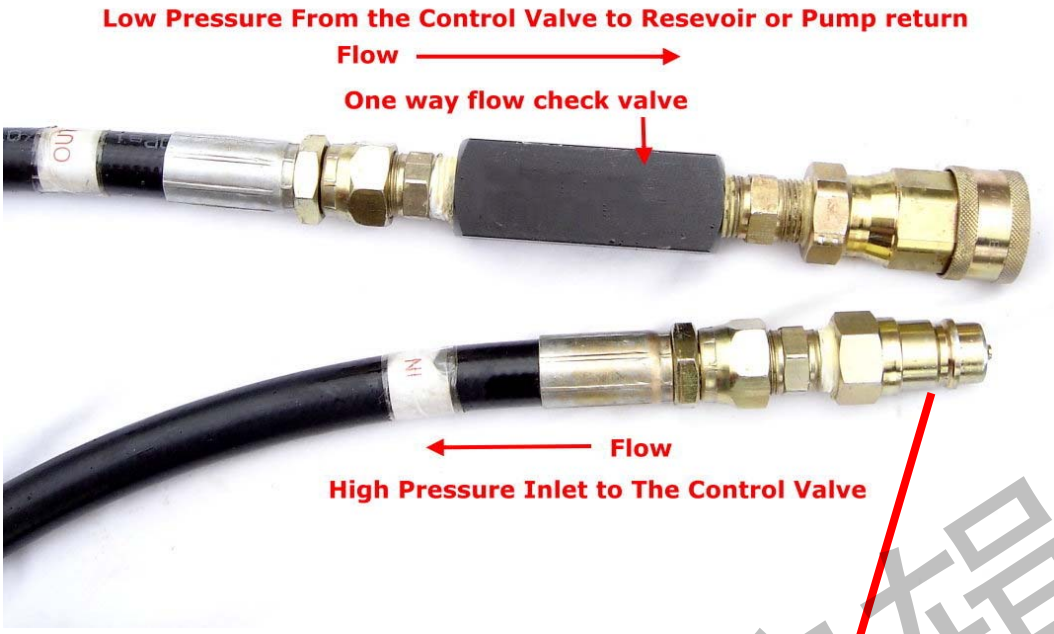

Hoses for the Tractor Hydraulic system

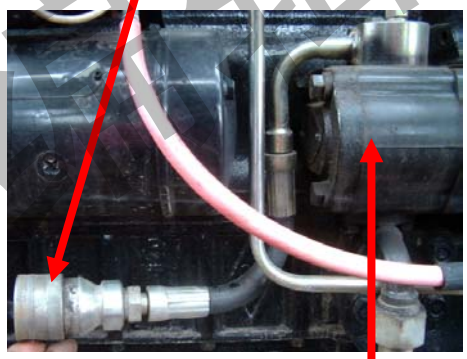

JM354 Hydraulic Pump

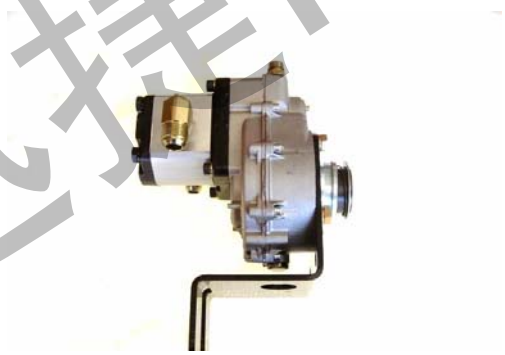

Factory Supplied PTO Pump

3 Point components and hookups
These parts come with your 3 point Backhoe, both models BH6600 / BH7600
Some parts may vary in size or length for each model.

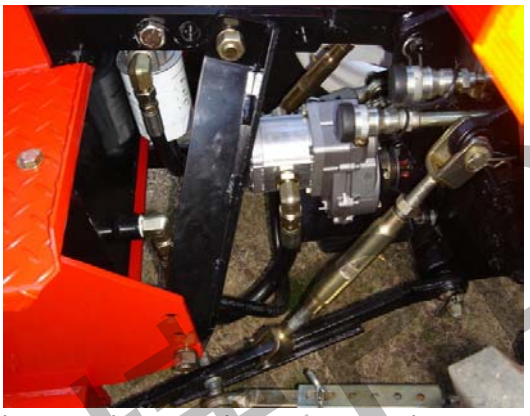
Shown with optional PTO pump and reservoir.


3 Point attaching point on a JM254LE


3 Point Shown Mounted on a Mahindra Tractor


Hose Kit supplied without PTO pump all fittings are JIC

ATTACHING KIT INSTRUCTIONS

3-POINT HITCH LINKAGE & MOUNT KIT & HYDRAULIC HOOK-UP

General Description

Mounting and hydraulics kits include two hoses which Can be used to connect the backhoe to the tractor hydraulic system. Additional hydraulic com-ponents or kits will be required to complete the hook-up to the tractor hydraulic system. Refer to the Hydraulic Hook-up section for futher information. Pumps and reservoir kits are available as options.

The backhoe is mounted on the tractor lower link arms and an adjustable upper link. A set of stabilizer arms is included. They bolt from the adjustable upper link to the backhoe mainframe, locking the hoe rigidly in one position.

IMPORTANT: Tractor lower links must be kept free of lifting forces at all times after installation of the attaching kit, by keeping tractor quadrant lever in the lowered position.

IMPORTANT: If the 3-point kit is to be used with a PTO & Reservoir Kit, the Reservoir Tank and it's fittings should be installed before proceeding with the 3-Point installation, this might be done at the factory depending on how purchased.

3-POINT HITCH LINKAGE ASSEMBLY (Refer to Figures 7, 8 below, page 30)

IMPORTANT: Tighten all hardware to the torque requirements specified in the torque chart.

⚠ *WARNING* ⚠

To prevent bodily injury, do not operate backhoe unless Lower Link Weldments(17,18) are properly installed and adjusted. Failure to do so may result in backhoe being thrust upward, crushing operator against cab or ROPS.

1. Use hoist to raise the backhoe mainframe so that the boom pivot pin is approximately 12"(BH6600), or 14" (BH7600), off the ground.

2. Back tractor close to the backhoe. Connect tractor lower link arms to lower link mounts at position "C" Figure 8, using two L-pins(4), two cotter pins, and two snap pins (7) as shown in Figure 8.

3. Secure upper bar(16) between upper braces(15) Using M20*2.5p*90 bolt(22), lock washer(20) And nut(21).Use hoist to raise or lower backhoe slightly until a hole in the upper bar aligns with a hole in the upper braces.

4. Attach RH lower link weldment(18) and LH lower link weldment(17) to backhoe mainframe using M20*2.5p*50 bolt(24), lockwasher(20), and nut(21).

5. Align RH and LH link weldment(17,18) with a hole in the upper bar/brace assembly, as close to the tractor as possible. Use M20*2.5p*110 bolt(23), lockwashers(20) and nut(21). You may need to return to Step 4 and readjust upward or downward the bolt connection.

6. Remove backhoe from the tractor.

7. Tighten all hardware at this time. Check your installation very carefully to be sure all members are correctly installed and securely fastened.

7A. If using optional PTO pump and Reservoir Kit proceed to that section prior to remounting the backhoe onto the tractor.

8. Connect hoses from the backhoe control valve to the tractor hydraulic system as described in "Hydraulic hook-up." Section, prior to remounting the backhoe onto the tractor.

Figure 7

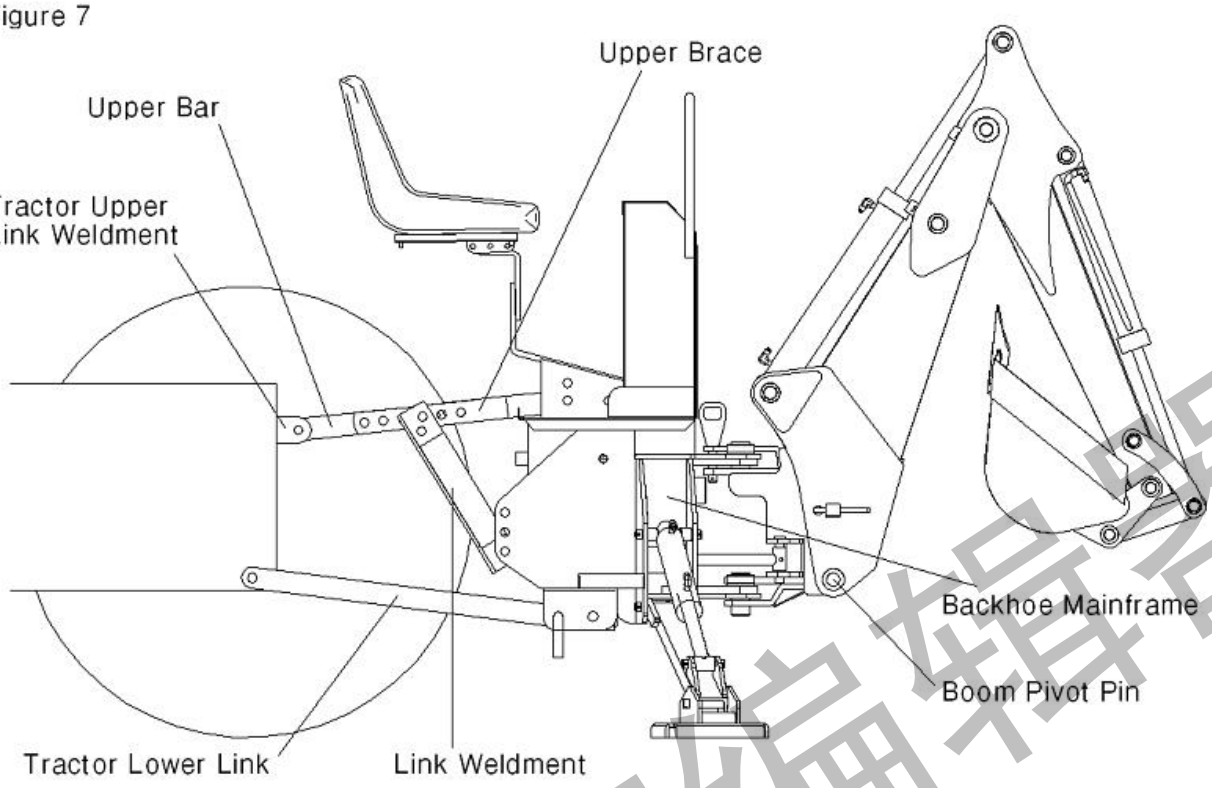

Figure 8

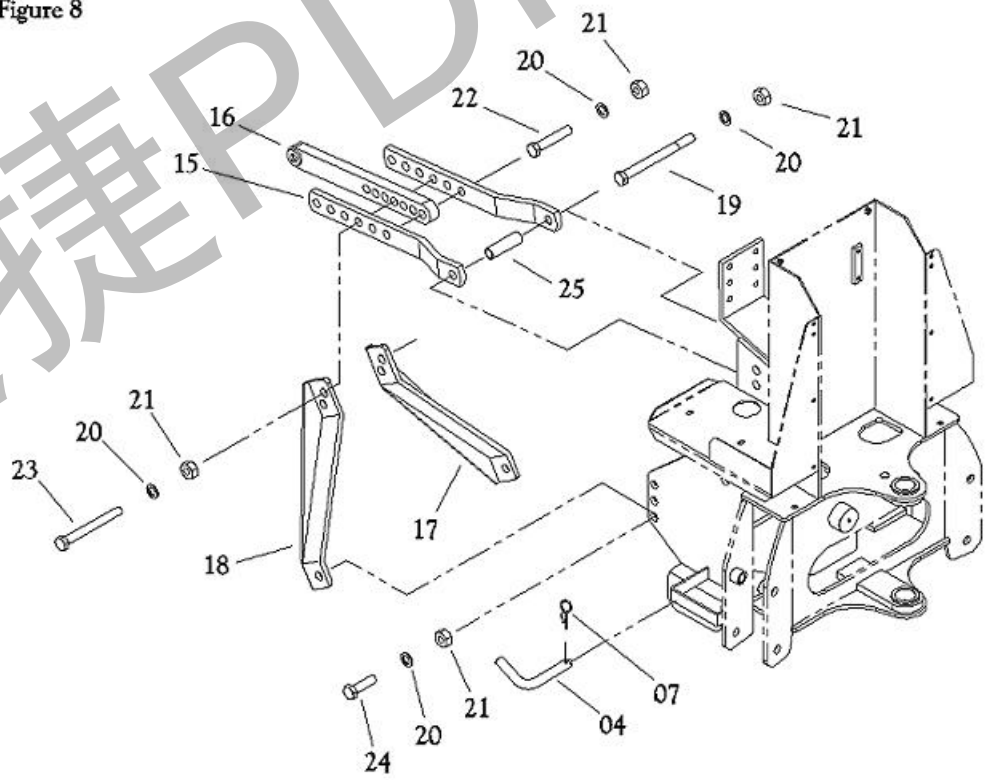

BH6600 / BH7600 JM254 JM354 Frame mount parts

General Description

Tractor will require setup, please consult your backhoe safety section for proper ballasting and other important safety precautions.

IMPORTANT: Remove tractor Upper 3-point Arm and Lower Draft Arms from tractor before proceeding.

IMPORTANT: Tighten all hardware to the torque requirements specified in the torque chart.

IMPORTANT: Some hardware on the sub frame has been factory preassembled for ease of shipment. This hardware must be loosened to ease initial assembly of kit to tractor and backhoe.

IMPORTANT: Some tractor or loader mounting hardware will be discarded and replaced by components in the backhoe mounting kit. Please read manual carefully, if loader and mount kit. Please read manual carefully, if loader and mount kit have already been installed, remove loader. Some of the loader mount kit hardware may need to be loosened, to ease backhoe mount kit installation

Adjustment of Sub frame Weldment (less backhoe) when Installed on Tractor with Loader Mount

1. Lift and slide hooks located on Sub frame Assembly into Tractor lower 3-point hitch connection points.

2. Remove Lock Pins (34) and Hair Pin Clips (10). Pivot assembly up and into Loader Mount Weldment. Secure to Loader Mount Weldment using Lock Pins (34) and Hair Pin Clips (10).
Tighten and torque all hardware that has been loosened, reinstalled, and installed up to this point. Remove sub frame assembly from tractor.

Sub frame Assembly to Basic Backhoe

1. Install sub frame assembly to basic backhoe using two 7/8 NF 2" bolts (3), 7/8" lock washers (9), and nuts (6). See figure 13A and figure 13B.

2. Assemble Braces (33) to sub frame using two 7/8NF 2" bolts (3), 7/8" lock washers (9), and nuts (6). Install Braces to backhoe mainframe using four 3/4 NF 2" bolts (2), 3/4" lock washers (8), and nuts (5). See figure 13A and figure 13B.

3. Tighten and torque all hardware.

4. Using a hoist on backhoe to prevent tipping. Raise backhoe slightly to remove blocking, then lower entire unit to the ground. Block as required.

5. Proceed to the "hydraulic Hook-Up" section of your backhoe Operator's Manual.

MOUNT KIT ASSEMBLY

Tractor will require setup, please consult your backhoe safety section for proper ballasting and other important safety precautions.

IMPORTANT: Remove tractor Upper 3-point Arm and Lower Draft Arms from tractor before proceeding.

IMPORTANT: Some hardware on the sub frame has been factory preassembled for ease of shipment. This hardware must be loosened to ease initial assembly of kit to tractor and backhoe.

IMPORTANT: Tighten all hardware to the torque requirements specified in the torque chart.

IMPORTANT: Some tractor or loader mounting hardware will be discarded and replaced by components in the backhoe mounting kit. Please read manual carefully, if loader and mount kit. Please read manual carefully, if loader and mount kit have already been installed. Some of the loader mount kit hardware may need to be loosened, to ease backhoe mount kit installation.

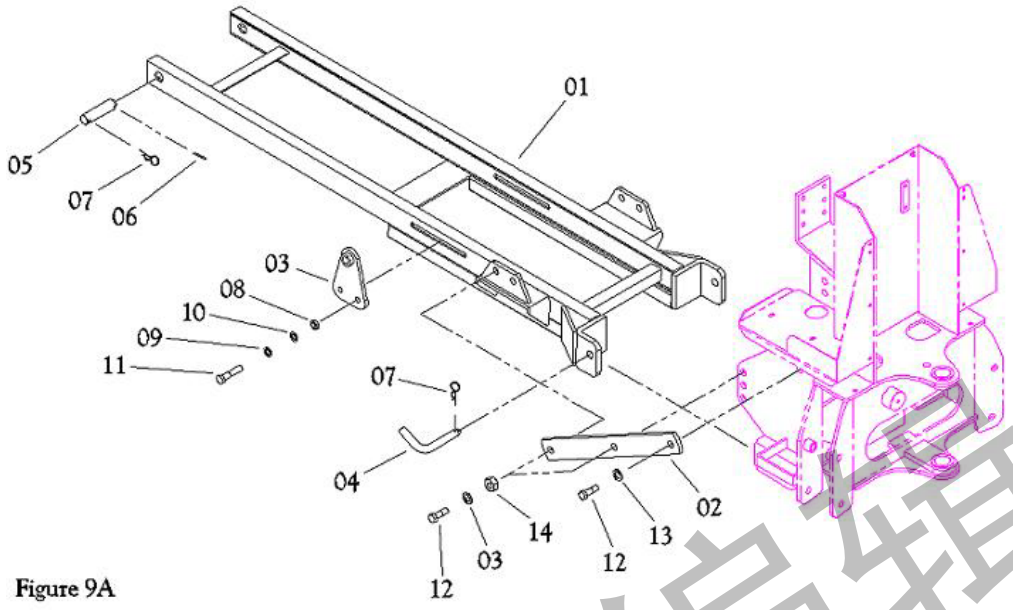

Figure 9A

Mount Kit(BH6600) + SubFrame(BH6600) - Hole A
Mount Kit(BH6600) + SubFrame(BH7600) - Hole B

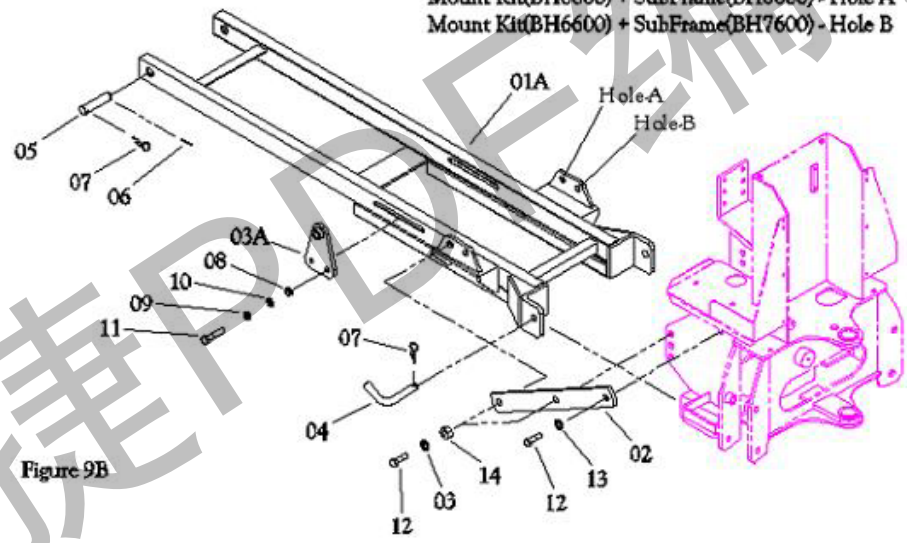

Figure 9B

Mount Kit(BH7600) + SubFrame(BH7600) - Hole B
Mount Kit(BH7600) + SubFrame(BH6600) - Hole A

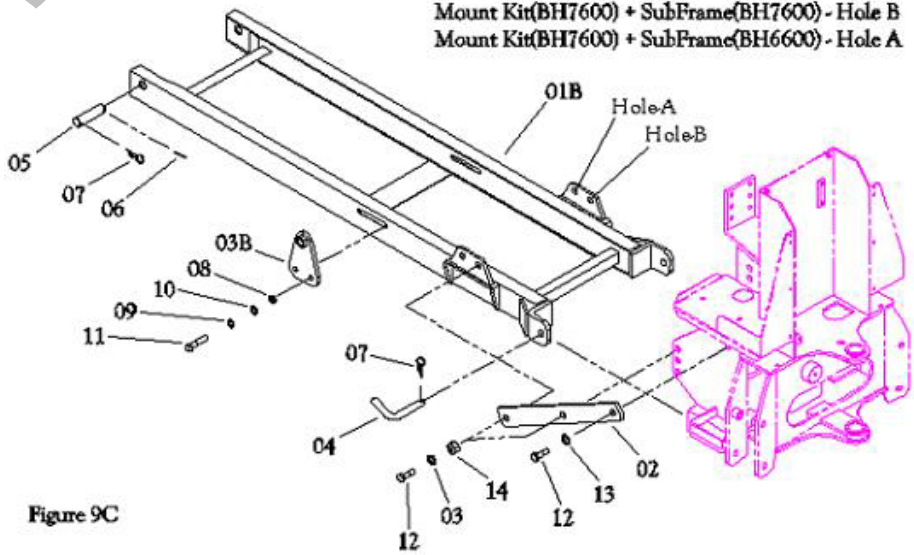

Figure 9C

Hydraulic Hook-Up

IMPORTANT - Follow instructions carefully when connecting backhoe to tractor hydraulic system.

The decal shown below is located on the Left-Hand toe shield.

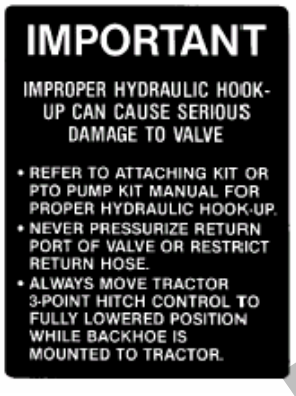

Installing Backhoe Hydraulic Hose Lines –

***IMPORTANT* - Improper hydraulic hook-up can cause serious damage to backhoe control valve or other hydraulic components. This is not covered under warranty.**

Inlet Line (HP Pressure to the control valve inlet)

Note: Place a container under INLET port to catch trapped oil.

1. Remove Valve Cover from backhoe.

2. Attach to the left side of the backhoe control valve, the 48-inch hydraulic hose (29) with hose sleeve (25), dust cap (35) and male coupler (19) to the INLET port on the valve. Secure hose sleeve with plastic tie (27) near male coupler. See Figure 14.

CAUTION

Hose Sleeves are installed to help protect the backhoe operator from escaping fluid under pressure. If it become damaged or lost, replace hose sleeve and plastic tie straps immediately.

Outlet Line (Return to the pump return or reservoir)

Note: Place a container under OUTLET port to catch trapped oil.

1. Attach to the left side of the backhoe control valve, the long 90 degree adapter union (14), the 48 inch hydraulic hose (29), Straight Adapter Union (17), Dust Plug (23), and female coupler (20) to the OUTLET port on the valve. See Figure 14.

2. Replace Valve Cover.

NOTE: Coupler Noses(19) are physically larger than Coupler Nose (21). Coupler Body (18) is physically larger than coupler Body (20). Make sure couplers are installed properly according to Figures 14 and 15. This will insure proper hydraulic coupling of backhoe to tractor during the installation process of the backhoe to tractor. If in doubt contact your dealer.

Installing Hydraulic Hose Lines to Tractor

IMPORTANT - Improper hydraulic hook-up can cause serious damage to tractor hydraulic components.

Rerouting Power Beyond Line (to Tractor Rockshaft)-

Note: Place a container under tractor loaded mid-mount valve to catch trapped oil.

1. Disconnect lower hose from the 90-degree fitting located at the front of loader mid-mount valve located

on the right hand side of the tractor. See Figure 15.
2. Reroute hose back under the center of the tractor. Direct it rearward on the left hand side, to the back of the tractor and lay it over the top of the left hand rear axle casting. Make sure that hose does not interfere with any lines or operational linkages.
3. Install Hose Sleeve (28), Straight Adapter Union(13), and Male Coupler (19) to hose. Secure hose sleeve with plastic tie (27) near male coupler. SeeFigure 15.
4. Using heavy-duty plastic tie (26) secure hose assembly to area near top of PTO shield.

CAUTION

Hose Sleeves are installed to help protect the backhoe operator from escaping fluid under pressure. If it becomes damaged or lost, replace hose sleeve and plastic tie straps immediately.

Loader Valve Tank Port Line (Return)
1. Disconnect hydraulic hose from right hand side of rockshaft housing. Hose is located just below right hand rockshaft arm.
2. Install Tee Fitting (16), Straight Adapter Union on right hand side of rockshaft housing. See Figure 15.
3. Reconnect and tighten hydraulic hose that was removed in step 1.

Loader Valve Pressure Line (from loader power beyond port)
1. Install the 86-inch hydraulic hose (30) to the 90-degree fitting located at the front of loader midmount valve located on the right hand side of the tractor. See Figure 15.
2. Route hose back under along the right hand side of the tractor. Direct it rearward on the right hand side, to the back of the tractor and lay it over the top of the right hand rear axle casting. Make sure that hose does not interfere with any lines or operational linkages. Secure hose along its route with two heavy-duty plastic ties (26).
3. Install Hose Sleeve (28), Plastic Tag (31), 90-degree Adapter Union (15), and Female Coupler (18) to hose. Secure hose sleeve with plastic tie (27) near adapter union. See Figure 15.
4. Make sure that all hydraulic connections made to the tractor are tight and leak free.

Continue with Installation and Removal section of the Operator's Manual.

Valve Shown is on the BH7600

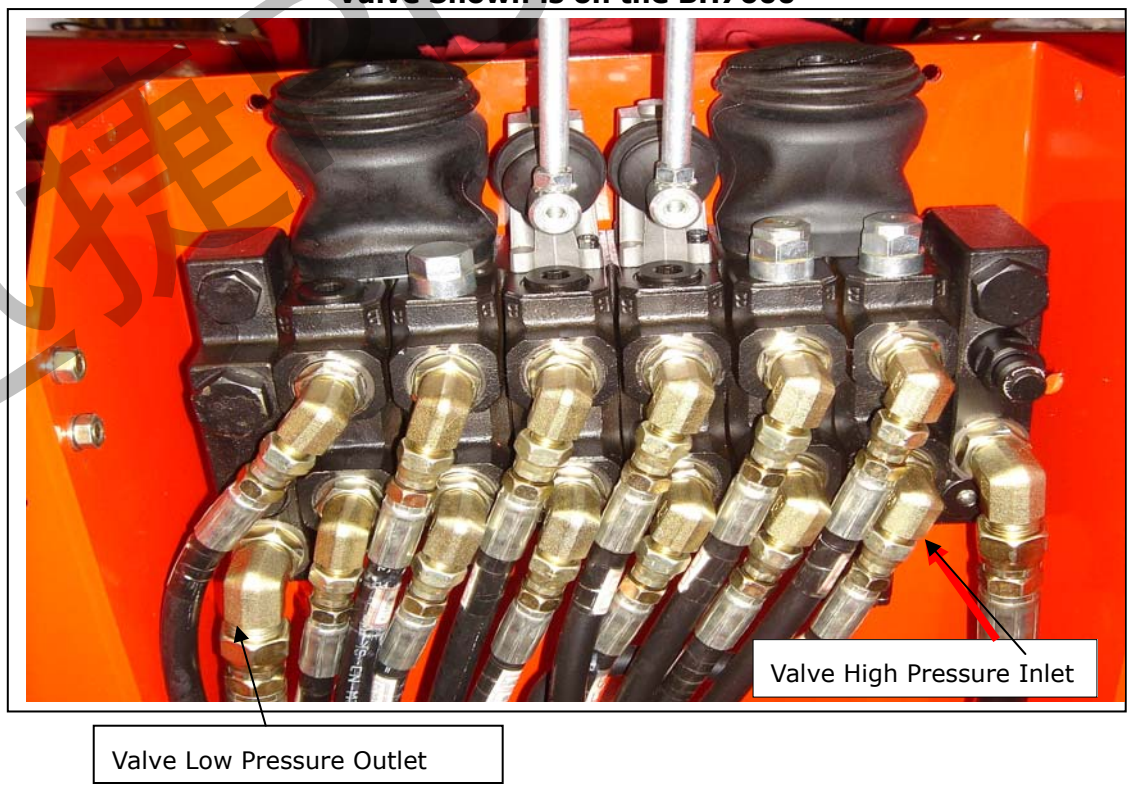

Valve Shown is used on the BH7600

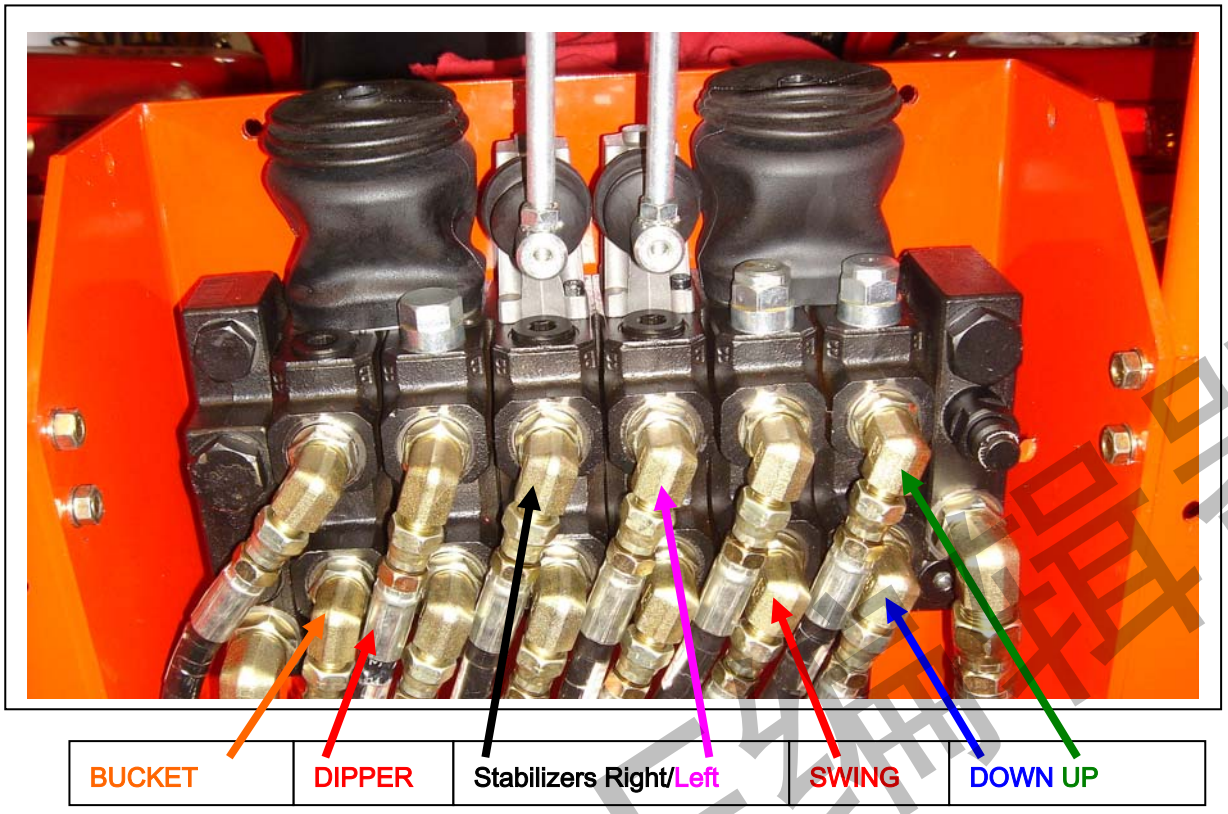

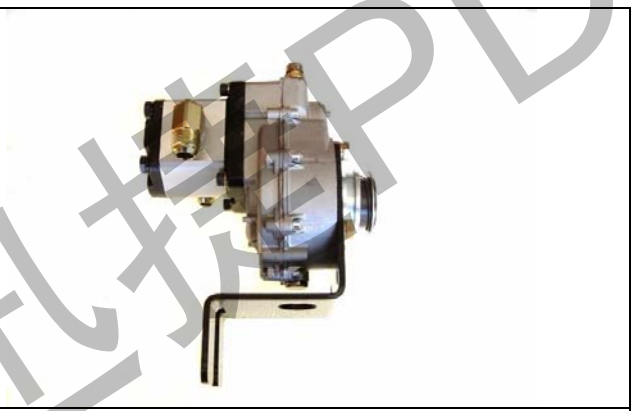	
Factory Supplied PTO Pump if purchased.	**Hose Kit Hose Kit if no PTO pump**

REGULAR DUTY DEEP PROFILE BUCKET PARTS BREAKDOWN
FOR THE BH6600 6-1/2' BH7600 7-1/2' BACKHOE

Index Number	Part Number	Description
1		Regular duty Deep Profile Bucket - 12"
2		Tooth and Shank Assemblies for 12" Bucket
3		Tooth Point for 12" Bucket
1		Regular Duty Deep Profile Bucket - 14"
2		Tooth and Shank Assemblies for 14"Bucket
3		Tooth Point For The 14"
1		Regular Duty Deep Profile Bucket - 16"
2		Tooth and Shank Assemblies for 16"Bucket
3		Tooth Point for The 16" Bucket

Bucket Data: All Buckets are Interchangeable.

BUCKET	WIDTH	SAE STRUCK CAPACITY	HEAPED CAPACITY	SHIPPING WEIGHT
	12" 14" 16"	.50 cu. ft. .78 cu. ft. .98 cu. ft.	.64 cu. ft. 1.04 cu. ft. 1.33 cu. ft.	46 lbs. 52 lbs. 57 lbs.

TORQUE VALVES

Common bolts and nuts--Tightening Torque Plus/Minus 20%

Size	Grade 2	Grade 5	Grade 8
1/4-20 NC	70 in. lbs.	115 in. lbs.	165 in. lbs.
1/4-28 NF	85 in. lbs.	140 in. lbs.	200 in. lbs.
5/16-18 NC	150 in. lbs.	250 in. lbs.	350 in. lbs.
5/16-24 NF	165 in. lbs.	270 in. lbs.	30 ft. lbs.
3/8-16 NC	260 in. lbs.	35 ft. lbs.	50 ft. lbs.
3/8-24 NF	300 in. lbs.	40 ft. lbs.	60 ft. lbs.
7/16-14 NC	35 ft. lbs.	55 ft. lbs.	80 ft. lbs.
7/16-20 NF	45 ft. lbs.	75 ft. lbs.	105 ft. lbs.
1/2-13 NC	50 ft. lbs	80 ft. lbs.	115 ft. lbs.
1/2-20 NF	70 ft. lbs.	105 ft. lbs.	165 ft. lbs.
9/16-12 NC	75 ft. lbs.	125 ft. lbs.	175 ft. lbs.
9/16-18 NF	100 ft. lbs.	165 ft. lbs.	230 ft. lbs.
5/8-11 NC	110 ft. lbs.	180 ft. lbs.	260 ft. lbs.
5/8-18 NF	140 ft. lbs.	230 ft. lbs.	330 ft. lbs.
3/4-10 NC	150 ft. lbs.	245 ft. lbs.	350 ft. lbs.
3/4-16 NF	200 ft. lbs.	325 ft. lbs.	470 ft. lbs.

Note - See tractor instruction manual or your tractor dealer for tightening of metric bolts.

SERVICE NOTES:

Parts List:

BH6600 & BH7600 BACKHOE

CONTENTS

1. SUB FRAME PARTS

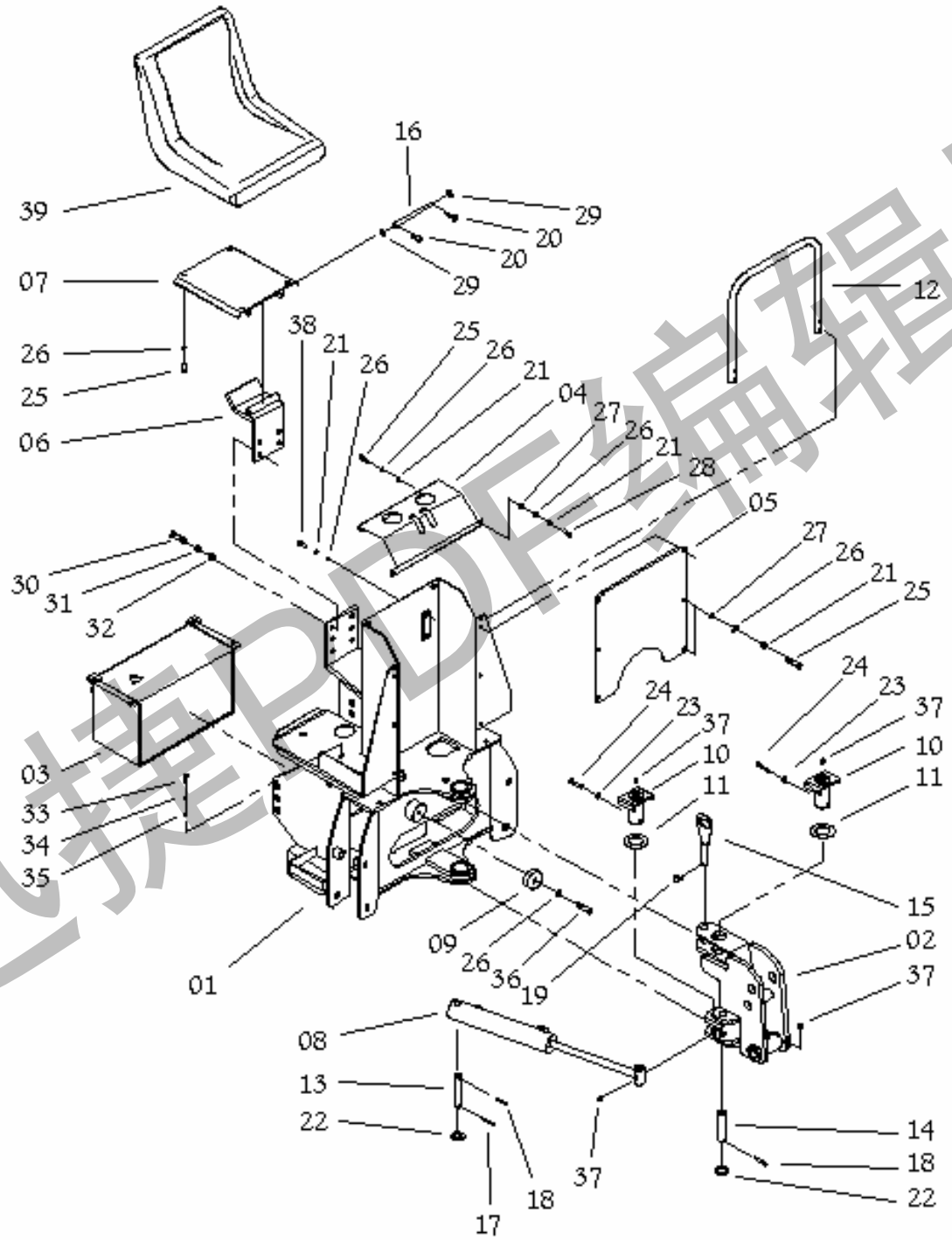

1. SUB FRAME PART

Index No.	Parts Number	Description	Q'ty		Remark
			BH6600	BH7600	
1-01	BH111-11001	Sub Frame/BH7600		1	
	BH121-11001	Sub Frame/BH6600	1		
1-02	BH111-12001	Swing Frame/BH7600		1	
	BH121-12001	Swing Frame/BH6600	1		
1-03	BH600-11001	Oil-Tank	1	1	
1-04	BH111-00191	Valve Cover/Upper/BH7600		1	
	BH121-00191	Valve Cover/Upper/BH6600	1		
1-05	BH111-00201	Valve Cover/Side/BH7600		1	
	BH121-00201	Valve Cover/Side/BH6600	1		
1-06	BH110-20000	Seat Support Bracket	1	1	
1-07	BH111-21000	Seat	1	1	
1-08	BH111-00260	Swing cylinder	2	2	
1-09	BH111-00130	Cushion Rubber	2	2	
1-10	BH110-15000	Hinge Pin	2	2	
1-11	BH111-00151	Spacer Plate	2	2	
1-12	BH111-00290	Handle		1	
	BH121-00290	Handle	1		
1-13	BH111-00121	Cylinder Pin/Swing	2	2	
1-14	BH111-00310	Swing cylinder Pin	2	2	
1-15	BH111-26000	Swing Fixed Pin	1	1	
1-16	BH111-00140	Seat Support Hinge Pin	1	1	
1-17	S515000535	Spring Pin/Φ5*35	2	2	
1-18	S513110545	Split Pin/Φ5*45	4	4	
1-19	S514210025	Snap Pin/Φ3*Φ20	1	1	
1-20	S514210020	Snap Pin/Φ3*Φ10	2	2	
1-21	S400410008	Flat Washer/Φ8	13	14	
1-22	S400410020	Flat Washer/Φ20	4	4	
1-23	S211531008	U-Nut/M8*1.25p	2	2	
1-24	S111110855	Bolt/M8*1.25p*55	2	2	
1-25	S111110820	Bolt/M8*1.25p*20	10	10	
1-26	S431010008	Lock Washer/Φ8	17	18	
1-27	S211211008	Nut/M8*1.25p	8	8	
1-28	S111110845	Bolt/M8*1.25p*45	4	4	
1-29	S400410012	Flat Washer/Φ12	2	2	
1-30	S113511240	Bolt/M12*1.25p*40	4	4	
1-31	S431010012	Lock Washer/Φ12	4	4	
1-32	S212231012	Nut/M12*1.25p	4	4	
1-33	S111111035	Bolt/M10*1.5p*35	4	4	
1-34	S431010010	Lock Washer/Φ10	4	4	
1-35	S400410010	Flat Washer/Φ10	4	4	
1-36	S111110835	Bolt/M8*1.25p*35	2	2	
1-37	S561130208	Greese Nipple/PT1/8	7	7	
1-38	SS100-00011	Bolt/ 5/16-18*1"	3	4	
1-39	BH-STSS	Seat	1	1	

2. STABILIZER PART

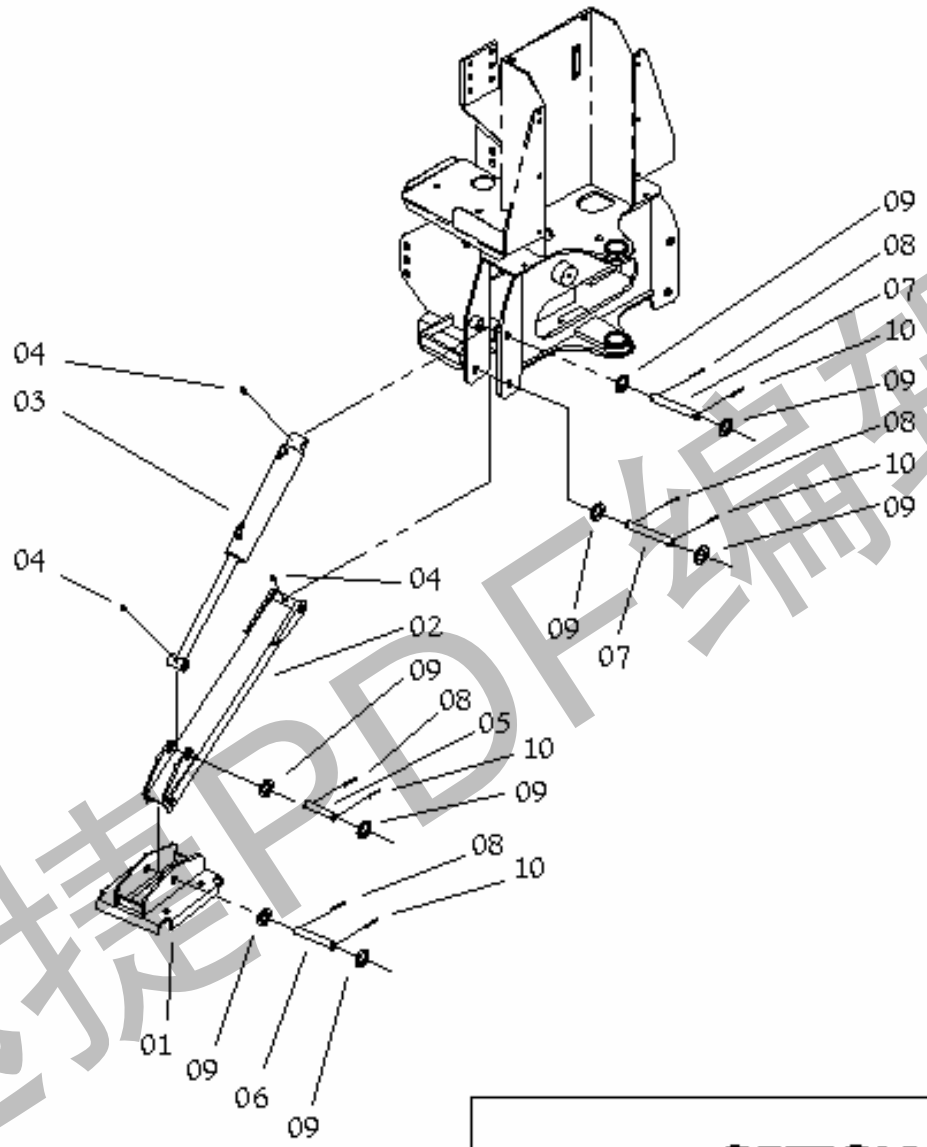

OPTION

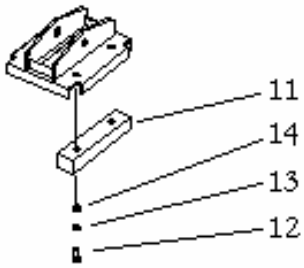

2. STABILIZER PARTS

Index No.	Parts Number	Description	Q'ty		Remark
			BH6600	BH7600	
2-01	BH111-19001	Leg Support	2	2	
2-02	BH111-18000	Stabilizer Leg/BH7600		2	
	BH121-18000	Stabilizer Leg/BH6600	2		
2-03	BH111-00270	Stabilizer Cylinder/BH7600		2	
	BH121-00270	Stabilizer Cylinder/BH6600	2		
2-04	S561130208	Greese Nipple/PT1/8	6	6	
2-05	BH111-00110	Cylinder Pin/Stabilizer	2	2	
2-06	BH111-00050	Leg Support Fixed Pin	2	2	
2-07	BH111-00040	Leg Fixed Pin	4	4	
2-08	S513110545	Split Pin/Φ5*45	8	8	
2-09	S400410020	Flat Washer/Φ20	16	16	
2-10	S515000535	Spring Pin/Φ5*35	8	8	
2-11	BH111-00320	Pad	4	4	
2-12	S113511240	Bolt/M12*1.25p*40	8	8	
2-13	S431010012	Lock Washer/Φ12	8	8	
2-14	S212231012	Nut/M12*1.25p	8	8	

3. BUCKET/DIPPER/BOOM PARTS

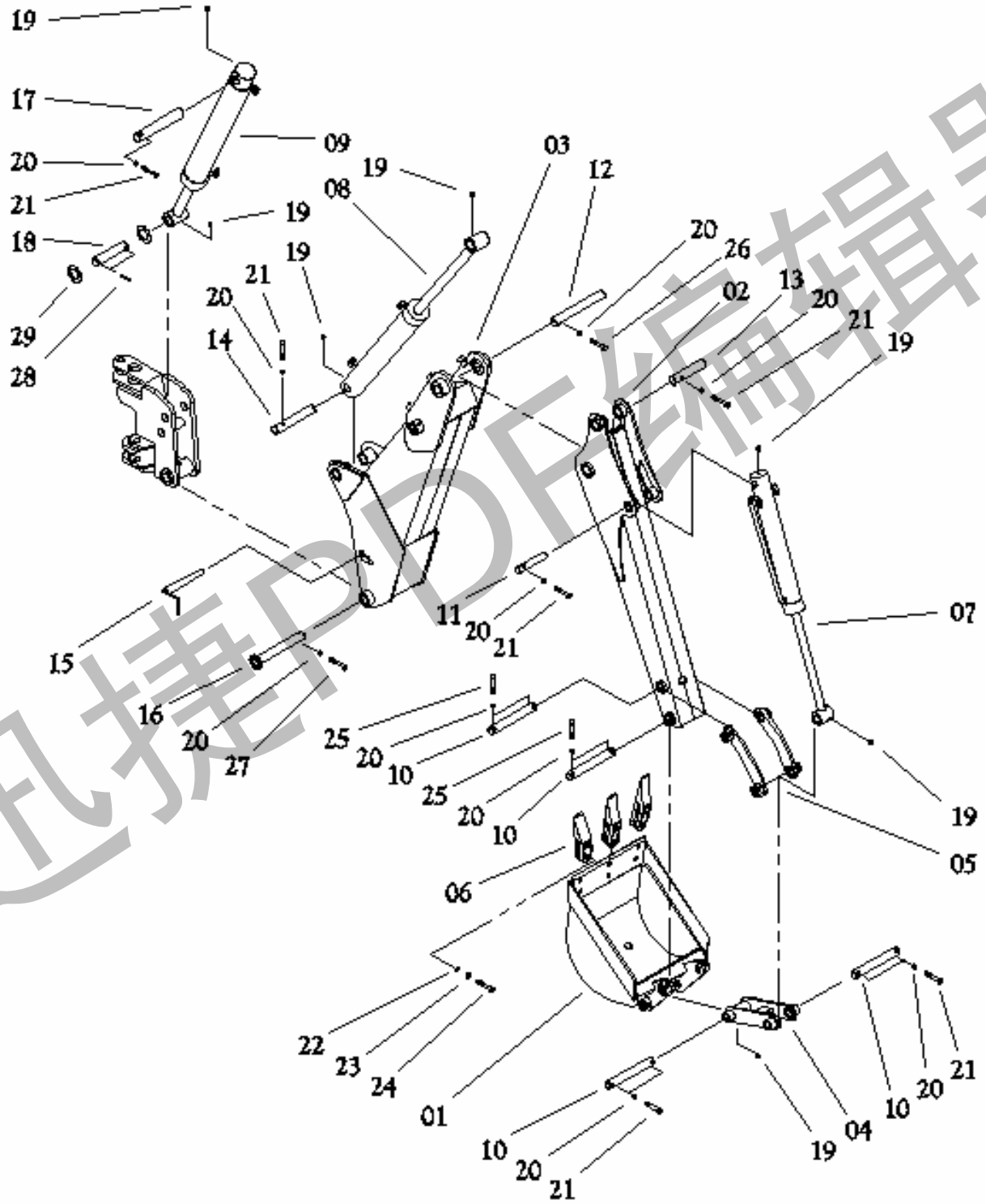

3. BUCKET/DIPPER/BOOM PART

Index No.	Parts Number	Description	Q'ty		Remark
			BH6600	BH7600	
3-01	BH220-12001	Bucket/16"		1	
	BH210-12001	Bucket/14"	1		
3-02	BH111-14001	DIPPER/BH7600		1	
	BH121-14001	DIPPER/BH6600	1		
3-03	BH111-13001	BOOM/BH7600		1	
	BH121-13001	BOOM/BH6600	1		
3-04	BH111-16000	Link Support Bracket/BH7600		1	
	BH121-16000	Link Support Bracket/BH6600	1		
3-05	BH111-17000	Link Guide/BH7600		2	
	BH121-17000	Link Guide/BH6600	2		
3-06	BH200-00010	Tooth	3	4	
3-07	BH111-00250	Bucket Cylinder/BH7600		1	
	BH121-00250	Bucket Cylinder/BH6600	1		
3-08	BH111-00240	Dipper Cylinder/BH7600		1	
	BH121-00240	Dipper Cylinder/BH6600	1		
3-09	BH111-00230	Boom Cylinder/BH7600		1	
	BH121-00230	Boom Cylinder/BH6600	1		
3-10	BH111-00030	Bucket Fixed Pin	4	4	
3-11	BH111-00100	Cylinder Pin/Bucket	1	1	
3-12	BH111-00020	Dipper Fixed Pin	1	1	
3-13	BH111-00090	Cylinder Pin/Dipper 2	1	1	
3-14	BH111-00080	Cylinder Pin/Dipper1	1	1	
3-15	BH111-27000	Boom Fixed Pin 1	1	1	
3-16	BH111-25000	Boom Fixed Pin 2	1	1	
3-17	BH111-00070	Cylinder Pin/Boom 2	1	1	
3-18	BH111-00060	Cylinder Pin/Boom 1	1	1	
3-19	S561130208	Greese Nipple/PT1/8	9	9	
3-20	S211531008	U-Nut/M8*1.25p	14	14	
3-21	S111110855	Bolt/M8*1.25p*55	8	8	
3-22	S212231012	NUT/M12*1.25p	6	8	
3-23	S431010012	Lock Washer/Φ12	6	8	
3-24	S113511245	Bolt/M12*1.25p*45	6	8	
3-25	S111110850	Bolt/M8*1.25p*50	4	4	
3-26	S111110870	Bolt/M8*1.25p*70	1	1	
3-27	S111110865	Bolt/M8*1.25p*65	1	1	
3-28	S515000845	Spring pin/Φ8*45	2	2	
3-29	BH111-00300	Cylinder Pin Washer	2	2	

4. MOUNTING PARTS

A. FRAME MOUNT KIT TYPE

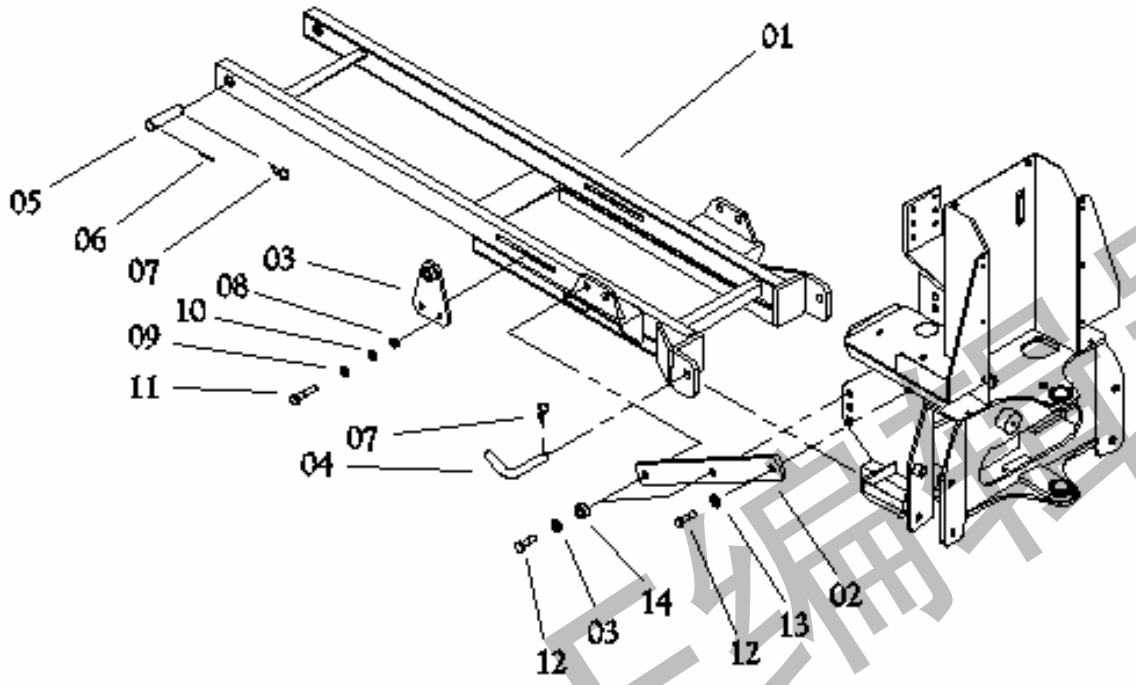

B. 3 POINT TYPE

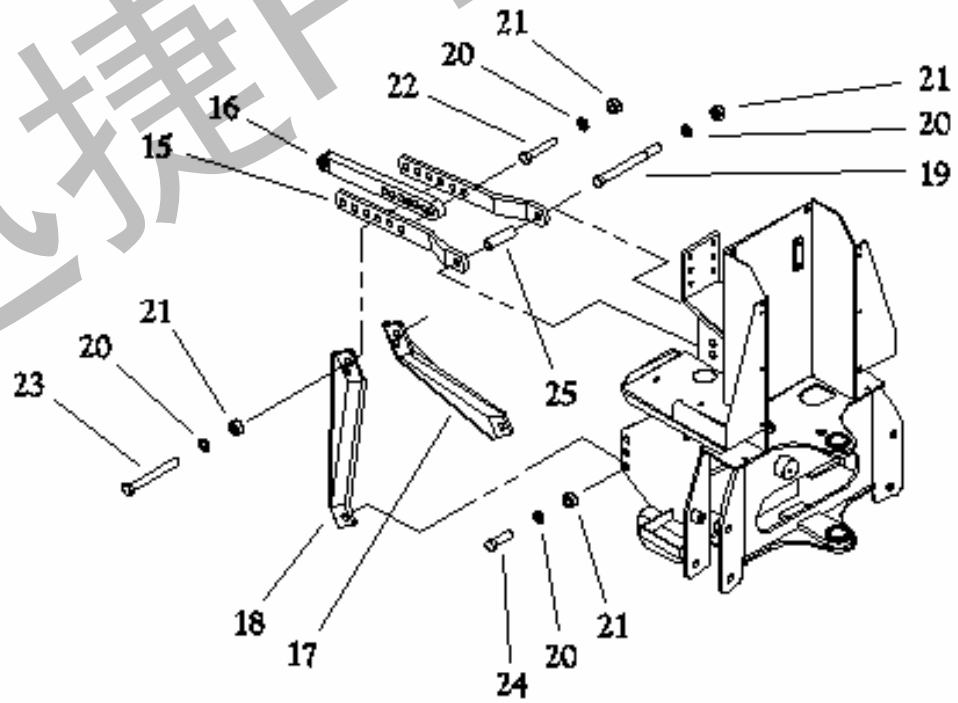

4. MOUNTING PART

A. FRAME MOUNT KIT TYPE

Index No.	Parts Number	Description	Q'ty		Remark
			BH6600	BH7600	
4-01	BH310-11001	Frame Mount/BH7600		1	
	BH410-11002	Frame Mount/BH6600	1		
4-02	BH310-00012	Attach Plate	2	2	
4-03	BH310-12000	Frame Fixed Plate/BH7600		2	
	BH400-12000	Frame Fixed Plate/BH6600	2		
4-04	BH111-00210	Lock Pin	2	2	
4-05	BH310-00020	Frame Fixed Pin	2	2	
4-06	S515000850	Spring Pin/Φ8*50	2	2	
4-07	S514210040	Snap Pin/Φ5	4	4	
4-08	S211231016	Nut/M16*2P	4	4	
4-09	S400410016	Flat Washer/Φ16	4	4	
4-10	S431010016	Lock Washer/Φ16	4	4	
4-11	S111511690	Bolt/M16*2p*90		4	
	S111511680	Bolt/M16*2p*80	4		
4-12	S111512050	Bolt/M20*2.5P*50	6	6	
4-13	S431010020	Lock Washer/Φ20	6	6	
4-14	S211231020	Nut/M20*2.5P	4	4	

B. 3 POINT TYPE

Index No.	Parts Number	Description	Q'ty		Remark
			BH6600	BH7600	
4-15	BH510-00020	Link Fixed Bar/BH7600		2	
	BH500-00021	Link Fixed Bar/BH6600	2		
4-16	BH510-11000	Upper Link Bar/BH7600		1	
	BH500-11000	Upper Link Bar/BH6600	1		
4-17	BH510-12001	Link Fixed Bar/Left/BH7600		1	
	BH500-12002	Link Fixed Bar/Left/BH6600	1		
4-18	BH510-13001	Link Fixed Bar/Right/BH7600		1	
	BH500-13002	Link Fixed Bar/Right/BH6600	1		
4-19	SS100-00010	Bolt/M20*2.5P*180	1	1	
4-20	S431010020	Lock Washer/Φ20	5	5	
4-21	S211231020	Nut/M20*2.5P	5	5	
4-22	S111112090	Bolt/M20*2.5P*90	1	1	
4-23	S111112002	Bolt/M20*2.5P*110	1	1	
4-24	S111512050	Bolt/M20*2.5P*50	2	2	
4-25	BH500-00030	Upper Link Bushing	1	1	

5. HYDRAULIC PARTS

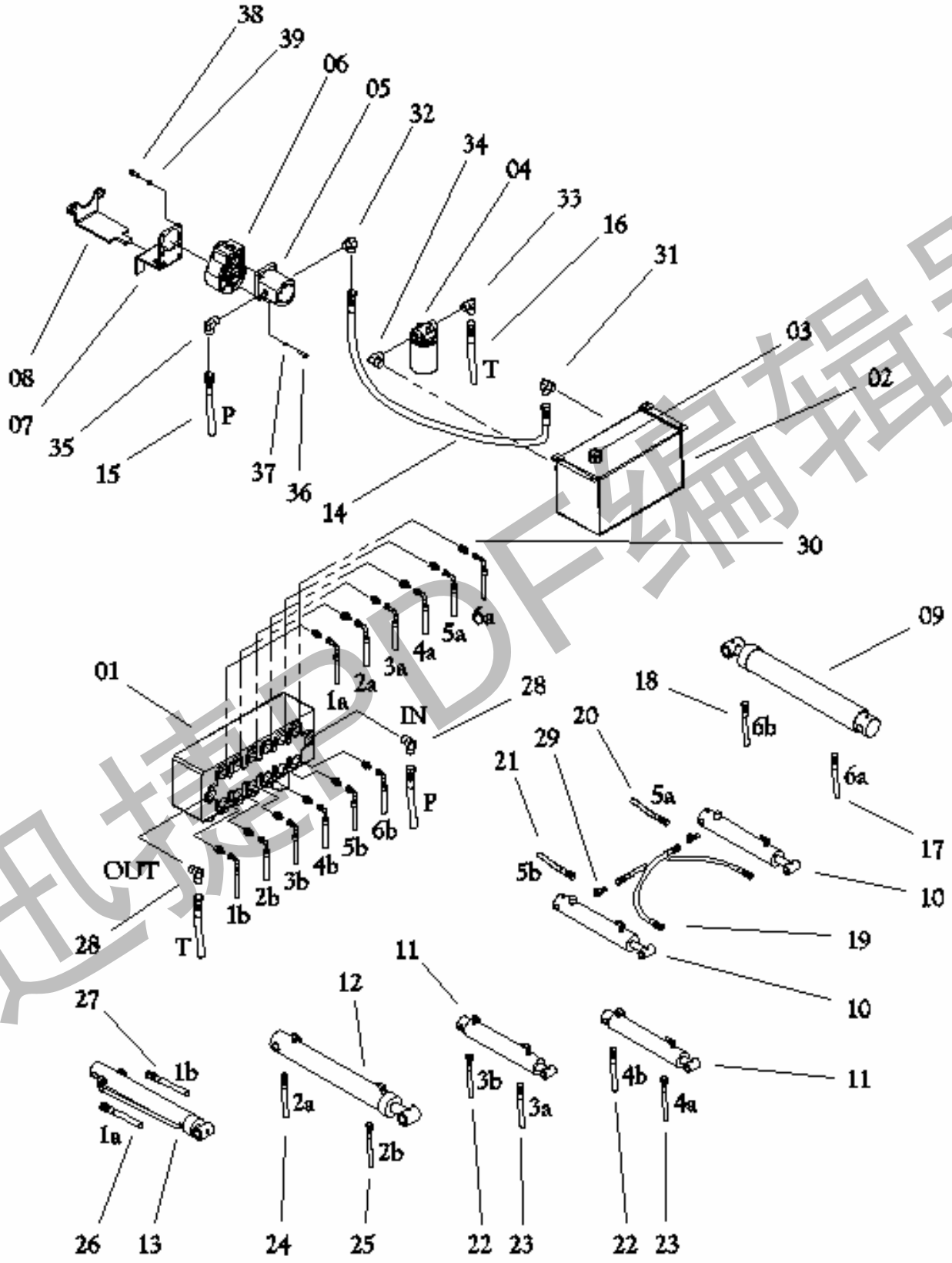

5. HYDRAULIC PARTS

Index No.	Parts Number	Description	Q'ty		Remark
			BH6600	BH7600	
5-01	BH-CV556	Valve/556		1	
	BH-CV126	Valve/126	1		
5-02	BH600-11001	OILTANK	1	1	
5-03	BH-AB138040	Filter/OT	1	1	
5-04	BH-MX2406	Filter/OTP	1	1	
5-05	BH-P20140	Pump/14/7600		1	
	BH-P20112	Pump/11.2/6600	1		
5-06	BH-GMP2	Gear Box &	1	1	
	BH-CA2522	Coupling(25-22-14)	1	1	
5-07	BH600-00010	Pump fixed flate	1	1	
5-08	BH600-12000	Pump support Plate	1	1	
5-09	BH111-00230	Boom Cylinder/7600		1	
	BH121-00230	Boom Cylinder/6600	1		
5-10	BH111-00260	Swing Cylinder	2	2	
5-11	BH111-00270	Stabilizer Cylinder/7600		2	
	BH121-00270	Stabilizer Cylinder/6600	2		
5-12	BH111-00240	Dipper Cylinder/7600		1	
	BH121-00240	Dipper Cylinder/6600	1		
5-13	BH111-00250	Bucket Cylinder/7600		1	
	BH121-00250	Bucket Cylinder/6600	1		
5-14	SS500-00025	Hydraulic Hose/¾*750		1	
	SS500-00024	Hydraulic Hose/¾*700	1		
5-15	SS500-00046	Hydraulic Hose/½*1700		1	
	SS500-00045	Hydraulic Hose/½*1600	1		
5-16	SS500-00044	Hydraulic Hose/½*1130	1	1	
5-17	SS501-00011	Hydraulic Hose/H ¼*1950		1	
	SS501-00010	Hydraulic Hose/H ¼*1850	1		
5-18	SS501-00004	Hydraulic Hose/L ¼*1950		1	
	SS501-00003	Hydraulic Hose/L ¼*1850	1		
5-19	SS500-00017	Hydraulic Hose/¼*400	2	2	
5-20	SS501-00008	Hydraulic Hose/H ¼*1000	1	1	
5-21	SS501-00001	Hydraulic Hose/L ¼*1000	1	1	
5-22	SS501-00009	Hydraulic Hose/H ¼*1150	2	2	
5-23	SS501-00002	Hydraulic Hose/L ¼*1150	2	2	
5-24	SS501-00012	Hydraulic Hose/H ¼*2100		1	
	SS501-00011	Hydraulic Hose/H ¼*1950	1		
5-25	SS501-00005	Hydraulic Hose/L ¼*2100		1	
	SS501-00004	Hydraulic Hose/L ¼*1950	1		
5-26	SS501-00014	Hydraulic Hose/H ¼*2900		1	
	SS501-00013	Hydraulic Hose/H ¼*2700	1		
5-27	SS501-00007	Hydraulic Hose/L ¼*2900		1	
	SS501-00006	Hydraulic Hose/L ¼*2700	1		
5-28	S59S0LAA04	Nipple/Elbow/UNF⅞[SAE]*UNF⅞		2	
	S59S0LAA09	Nipple/Elbow/UNF¾[SAE]*UNF⅞	2		

5. HYDRAULIC PARTS

Index No.	Parts Number	Description	Q'ty		Remark
			BH6600	BH7600	
5-29	SS310-00002	Nipple/Tee/PT¼*UNF½*UNF½	2	2	
5-30	S59S0SAA11	Nipple/UNF¾[SAE]*UNF½	12	12	
5-31	S59SBLAA06	Nipple/Elbow/PT¾*UNF1 1/16	1	1	
5-32	S59SBLAA06	Nipple/Elbow/PT¾*UNF1 1/16		1	
	S59SBLAD04	Nipple/Elbow/PT½*UNF1 1/16	1		
5-33	S59SBLAE04	Nipple/Elbow/PT¾*UNF⅞	1	1	
5-34	S59SBLCA05	Nipple/Elbow/PT¾	1	1	
5-35	S59SBLAA05	Nipple/Elbow/PT½*UNF⅞	1	1	
5-36	S141008030	Bolt/Wrench/M8*1.25P*30	4	4	
5-37	S431010008	Lock Washer/Φ8	4	4	
5-38	S111111025	Bolt/M10*1.5P*25	4	4	
5-39	S431010010	Lock Washer/Φ10	4	4	

6. HYDRAULIC PARTS without PTO PUMP PARTS

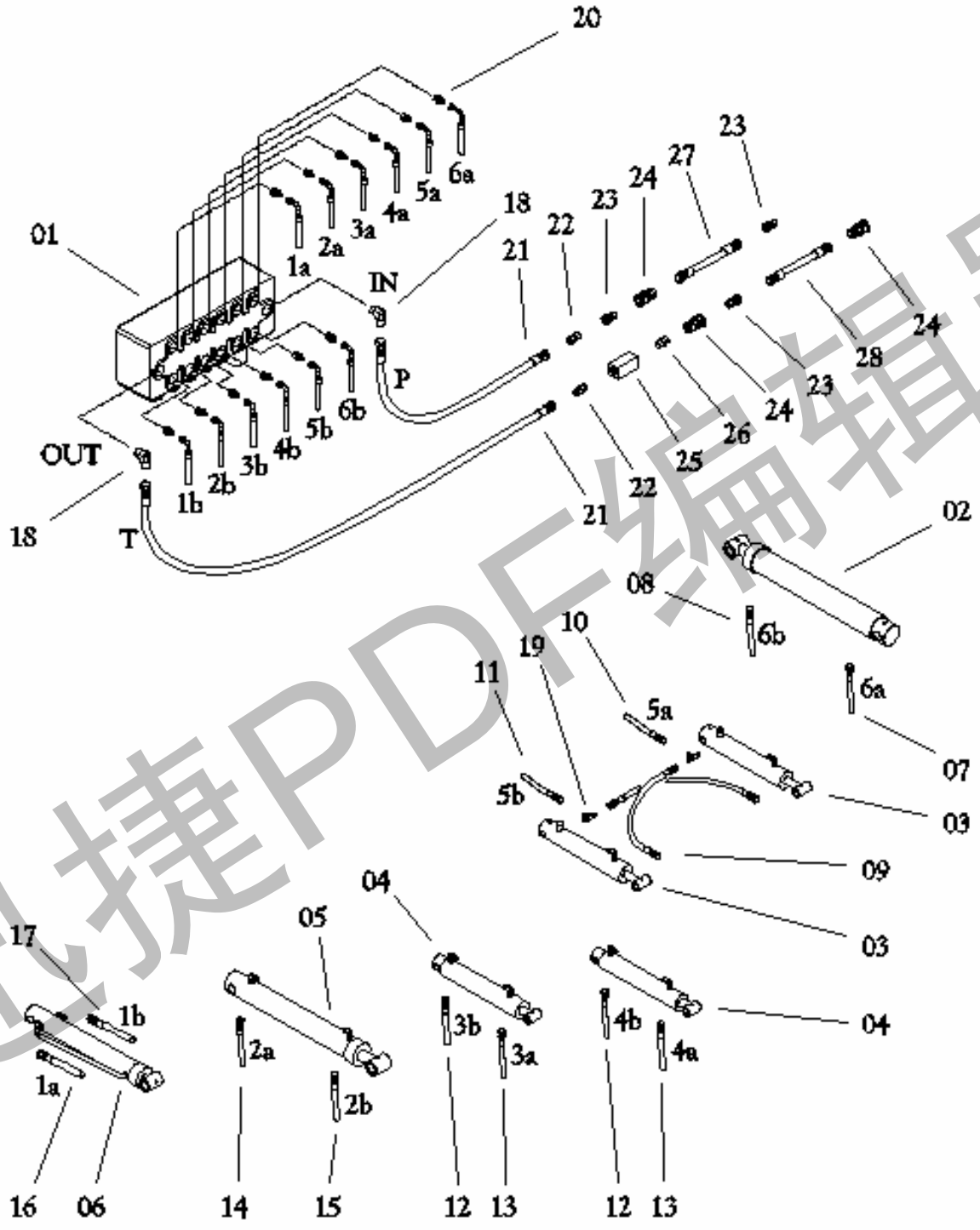

6. HYDRAULIC PARTS without PTO PUMP PARTS

Index No.	Parts Number	Description	Q'ty		Remark
			BH6600	BH7600	
6-01	BH-CV556	Valve/556		1	
	BH-CV126	Valve/126	1		
6-02	BH111-00230	Boom Cylinder/7600		1	
	BH121-00230	Boom Cylinder/6600	1		
6-03	BH111-00260	Swing Cylinder	2	2	
6-04	BH111-00270	Stabilizer Cylinder/7600		2	
	BH121-00270	Stabilizer Cylinder/6600	2		
6-05	BH111-00240	Dipper Cylinder/7600		1	
	BH121-00240	Dipper Cylinder/6600	1		
6-06	BH111-00250	Bucket Cylinder/7600		1	
	BH121-00250	Bucket Cylinder/6600	1		
6-07	SS501-00011	Hydraulic Hose/H ¼*1950		1	
	SS501-00010	Hydraulic Hose/H ¼*1850	1		
6-08	SS501-00004	Hydraulic Hose/L ¼*1950		1	
	SS501-00003	Hydraulic Hose/L ¼*1850	1		
6-09	SS500-00017	Hydraulic Hose/¼*400	2	2	
6-10	SS501-00008	Hydraulic Hose/H ¼*1000	1	1	
6-11	SS501-00001	Hydraulic Hose/L ¼*1000	1	1	
6-12	SS501-00009	Hydraulic Hose/H ¼*1150	2	2	
6-13	SS501-00002	Hydraulic Hose/L ¼*1150	2	2	
6-14	SS501-00012	Hydraulic Hose/H ¼*2100		1	
	SS501-00011	Hydraulic Hose/H ¼*1950	1		
6-15	SS501-00005	Hydraulic Hose/L ¼*2100		1	
	SS501-00004	Hydraulic Hose/L ¼*1950	1		
6-16	SS501-00014	Hydraulic Hose/H ¼*2900		1	
	SS501-00013	Hydraulic Hose/H ¼*2700	1		
6-17	SS501-00007	Hydraulic Hose/L ¼*2900		1	
	SS501-00006	Hydraulic Hose/L ¼*2700	1		
6-18	S59S0LAA04	Nipple/Elbow/UNF⅝[SAE]*UNF⅝		2	
	S59S0LAA09	Nipple/Elbow/UNF¾[SAE]*UNF⅝	2		
6-19	SS310-00002	Nipple/Tee/PT¼*UNF½*UNF½	2	2	
6-20	S59S0SAA11	Nipple/UNF¾[SAE]*UNF½	12	12	
6-21	SS500-00023	Hydraulic Hose/½*1700		2	
	SS500-00022	Hydraulic Hose/½*1600	2		
6-22	S59SBSAA05	Nipple/UNF⅝*PT½	2	2	
6-23	SS400-00005	Plug/PT½	3	3	
6-24	SS320-00002	Socket/PT½	3	3	
6-25	S59-CJCV12	Check Valve/PT½	1	1	
6-26	S59SBSCA04	Nipple/PT½	1	1	
6-27	SS500-00027	Hydraulic Hose/½*PT½*1370	1		
	SS500-00029	Hydraulic Hose/½*PT½*2000		1	
6-28	SS500-00026	Hydraulic Hose/½*PT½*890	1		
	SS500-00028	Hydraulic Hose/½*PT½*1400		1	

7. THUMB PARTS

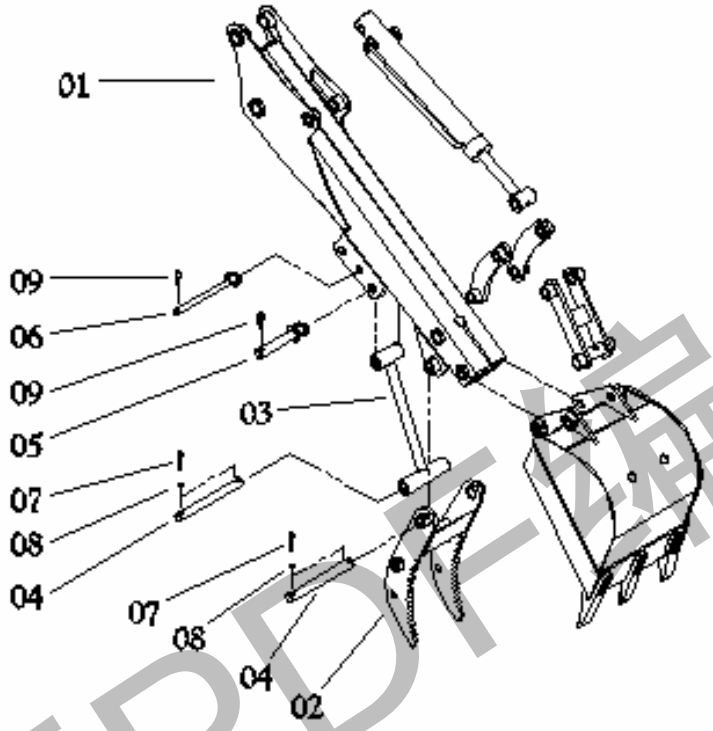

7. THUMB PARTS

Index No.	Parts Number	Description	Q'ty		Remark
			BH6600	BH7600	
7-01	TH110-11000	Dipper/thumb	1		
	TH120-11000	Dipper/thumb		1	
7-02	TH110-12000	Thumb	1	1	
7-03	TH110-13000	Thumb Link	1	1	
7-04	TH110-00010	Fixed Pin	2	2	
7-05	TH110-14000	Arm Fixed Pin	1	1	
7-06	TH110-15000	Lock pin	1	1	
7-07	S111110850	Bolt/M8*1.25p*50	4	4	
7-08	S211531008	U-Nut/M8*1.25p	4	4	
7-09	S514210040	Snap Pin/Φ5	2	2	